Scholar QV™

Heat Pump & Air Conditioner (CSI 15740)

INSTALLATION AND START-UP

Models VACA/VACSA & VAHA/VAHSA
2, 2.5, 3, 3.5, 4 & 5 Tons

⚠ WARNING

SAFETY REQUIREMENTS

- **If the information in these instructions are not followed exactly, a fire may result causing property damage, personal injury or loss of life.**
- **Read all instructions carefully prior to beginning the installation. Do not begin installation if you do not understand any of the instructions.**
- **Improper installation, adjustment, alteration, service or maintenance can cause property damage, personal injury or loss of life.**
- **Installation and service must be performed by a qualified installer or service agency in accordance with these instructions and in compliance with all codes and requirements of authorities having jurisdiction.**
- **Follow all safety codes.**

Scholar QV™

MODEL NO.: _____ **SERIAL NO.:** _____

DATE OF START-UP.: _____

Manufactured By:

Marvair Division of the AIRXCEL®

P.O. Box 400 • Cordele, Georgia 31010 • 156 Seedling Drive • Cordele, Georgia 31015
(229) 273-3636 • Fax (229) 273-5154
www.Marvair.com

The most current version of this manual can be found at www.Marvair.com.

Marvair Scholar QV™ VACA/VAHA I&S Manual 3/2019 Rev.18
P/N 01274

How To Use This Manual

This manual is intended to be a guide to the Marvair® Scholar QV™ line of vertical packaged heat pumps and air conditioners. It contains installation, troubleshooting, maintenance, warranty, and application information. The information contained in this manual is to be used by the installer as a guide only. This manual does not supersede or circumvent any applicable national or local codes.

If you are installing the Scholar QV™ heat pump or air conditioner, first read the entire manual and Appendices for any of the options and accessories before beginning the installation. The Appendices describe the installation of the base stand, the plenum, trim strips, wall brackets, outdoor louvers and the sound reduction panel.

If a malfunction occurs, follow this troubleshooting sequence:

1. Make sure you understand how the Scholar QV™ unit works.
2. Identify and correct installation errors.
3. If you are still unable to correct the problem, contact the Factory at 1-800-841-7854 for additional assistance.

Please read the following "Important Safety Precautions" before beginning any work. Failure to follow these rules may result in death, serious bodily harm, property damage and damage to the equipment.

Important SafetyPrecautions

1. USE CARE when LIFTING or TRANSPORTING equipment.
2. TRANSPORT the UNIT UPRIGHT. Laying it down on its side may cause oil to leave the compressor, resulting in DAMAGE upon START-UP.
3. TURN ELECTRICAL POWER OFF AT THE breaker or fuse box BEFORE installing or working on the equipment. LINE VOLTAGES ARE HAZARDOUS or LETHAL.
4. OBSERVE and COMPLY with ALL applicable PLUMBING, ELECTRICAL, and BUILDING CODES & ordinances.
5. SERVICE may be performed ONLY by QUALIFIED and EXPERIENCED PERSONS.

   *** Wear safety goggles when servicing the refrigeration circuit**
   *** Beware of hot surfaces on refrigerant circuit components**
   *** Beware of sharp edges on sheet metal components**
   *** Use care when reclaiming or adding refrigerant**

6. **Use COMMON SENSE - BE SAFETY CONSCIOUS**

This is the safety alert symbol ⚠. When you see this symbol on the Scholar unit and in the instruction manuals be alert to the potential for personal injury. Understand the signal word DANGER, WARNING and CAUTION. These words are used to identify levels of the seriousness of the hazard.

⚠ DANGER	Failure to comply will result in death or severe personal injury and/or property damage.
⚠ WARNING	Failure to comply could result in death or severe personal injury and/or property damage.
⚠ CAUTION	Failure to comply could result in minor personal injury and/or property damage.
IMPORTANT	Used to point out helpful info that will result in improved installation, reliability or operation.

Specifications subject to change without notice.

© 3/2019 Marvair®, Division of AIRXCEL®, Inc.

SECTION 15700

HEATING, VENTILATING AND AIR CONDITIONING EQUIPMENT

INSTALLATION AND START-UP INSTRUCTIONS

FOR SCHOLAR QV™ HEAT PUMPS AND AIR CONDITIONERS (15740)

TABLE OF CONTENTS

Article	*Description*	*Page*
1.01	Tools/Field Furnished Supplies	4
1.02	Inspection/Unpacking/Handling	4
1.03	Standard Controls	7
1.04A	Thermostats & Sub-bases	8
1.04B	Optional Controls	10
1.05	Location Preparation	12
1.06	Power and Control Wiring (Rough-In)	13
1.07	Condensate Drain Line (Rough-In)	16
1.08	Wet Heat (Rough-In)	16
1.09	Preparation of the Scholar QV™ Units	16
1.10	Installation Through the Outside Wall	18
1.11	Electric, Condensate and Wet Heat Hook-ups	19
1.12	Ventilation System Calibration	30
1.13	Control Adjustments	32
1.14	Remote Thermostat Installation	42
1.15	Start-up Procedure	43
1.16	Exploded Views and Parts Lists	45
Appendix A	Ratings and Data	46
Appendix B	Base Stand Installation	47
Appendix C	Wet Heat/Plenum Installation	51
Appendix D	Trim Strip Installation	57
Appendix E	Wall Bracket Installation	59
Appendix F	Outdoor Louver/Collar Installation	61
Appendix G	Sound Reduction Panel	65

SECTION 15700

HEATING, VENTILATING AND AIR CONDITIONING EQUIPMENT

1.01 TOOLS/FIELD FURNISHED SUPPLIES

⚠ WARNING

TO AVOID PERSONAL INJURY, ADEQUATE PROTECTIVE CLOTHING MUST BE WORN AND PRECAUTIONS IN HANDLING AND INSTALLING THIS EQUIPMENT MUST BE PRACTICED AT ALL TIMES.

- Power Drill/Driver & Extension
- T25 TORX Bits
- Needle Noise Pliers
- Wire Stripper/Cutter
- Spirit Level
- Tape Measure
- Screwdriver with Slotted Bit
- Caulk Gun
- Sealant Caulk (tube)
- Wire Nuts for Power and Control Wiring Gauges
- Supplies to Install PVC Condensate Drain
- Floor Fasteners for Cabinet (4 required for 1/2” pass through holes) - Appropriate Drivers for Floor Fasteners
- Supplies to Install Wet Heat Coil (Hot Water) (if appropriate)
- 25 Ft. of Polyurethane Foam Strips, 1” Wide x 1/2” Thick, Adhesive Backing, for Scholar QV/Wall Interface.

1.02 INSPECTION/UNPACKING/HANDLING

A. The Scholar QV™ heat pumps and air conditioners are shipped to the job site on 4x4 wood base framing, and enclosed in shrink wrap.

Freeblow and ducted plenums are shipped on wooden skids and enclosed in shrink wrap.

Outdoor louvers/collar assemblies, louvers and collars are shipped in corrugated containers.

Base stands are shipped on a wooden skid and are enclosed in shrink wrap.

Trim pieces are enclosed in corrugated carton and strapped to a wooden skid.

The sound reduction panel is shipped in a wooden crate after being shrink wrapped.

B. **Immediately upon delivery to the jobsite, each Scholar QV™ heat pump or air conditioner and the appropriate additional accessories should be inspected for visible and concealed damage. All damage must be reported to the freight carrier within 15 days, on the freight carrier's form.**

The Scholar QV™ heat pump or air conditioner and additional accessories should be stored inside and not exposed to outdoor weather conditions. Do not remove equipment from packing until it is ready to be installed.

⚠ WARNING

DO NOT STACK THE UNIT OR ANY ACCESSORIES ON TOP OF ONE ANOTHER.

THE UNITS SHOULD ALWAYS REMAIN IN THE UPRIGHT POSITION WHEN BEING SHIPPED, STORED, HANDLED OR INSTALLED.

DO NOT STORE THE UNIT OR ACCESSORIES IN OUTDOOR WEATHER CONDITIONS.

IF IT IS NECESSARY TO TILT THE SCHOLAR QV™ HEAT PUMP OR AIR CONDITIONER WHILE MOVING IT DURING INSTALLATION, BE SURE THE TOP END IS ALWAYS ABOVE THE BOTTOM BY AT LEAST 30 INCHES. THE UNIT SHOULD NOT BE ALLOWED TO REMAIN IN THE TILTED POSITION ANY LONGER THAN REQUIRED FOR THE ACTUAL MOVING PROCESS.

C. Note the unit identification label is located on left side cabinet panel at the lower front corner, as shown in Figure 1. The identification label has the model and serial number on it and the type of refrigerant and amount of refrigerant charge.

IMPORTANT

WHEN THE HEAT PUMP OR AIR CONDITIONER IS INSTALLED, MODEL NUMBER AND SERIAL NUMBERS ARE TO BE RECORDED ON THE COVER OF THIS MANUAL AND MAINTAINED IN A LOCATION FOR IMMEDIATE ACCESS, WHEN REQUESTING FURTHER INFORMATION CONCERNING THIS EQUIPMENT.

Serial Number Date Code

A = January	E = May	J = September	D = 2014	H = 2018
B = February	F = June	K = October	E = 2015	I = 2019
C = March	G = July	L = November	F = 2016	J = 2020
D = April	H = August	M = December	G = 2017	K = 2021

For the Scholar QV™ heat pump or air conditioner system, the identification numbering system is shown below. The model identification number is located as shown in Figure 1.

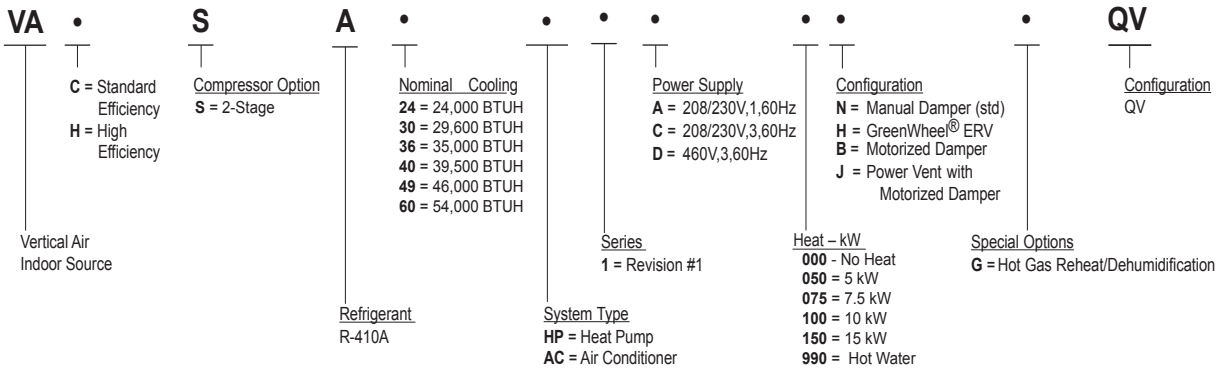

Figure 1. General External Component Identification and Access to Scholar QV™ Heat Pump or Air Conditioner

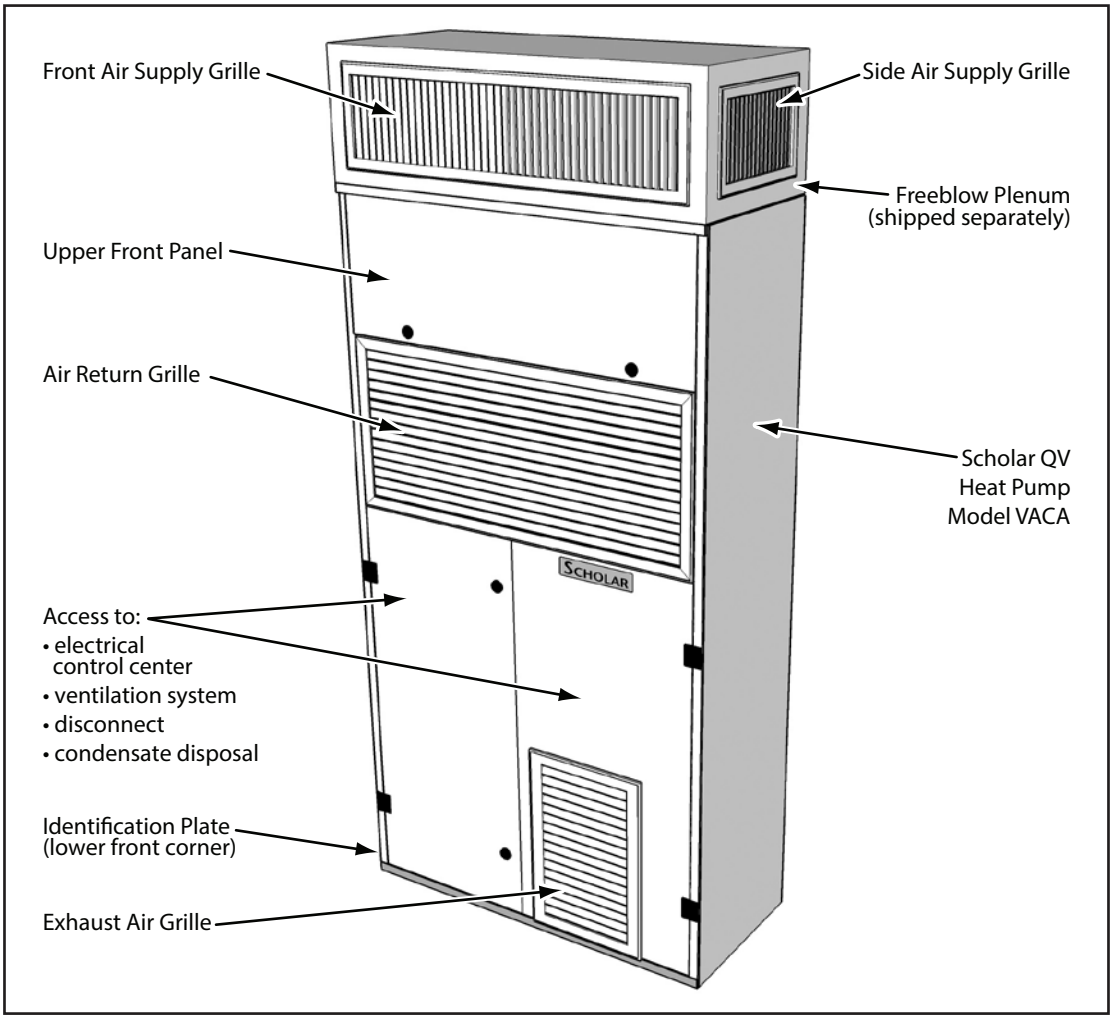

1.03 STANDARD CONTROLS

A. Programmable Logic Controller (PLC) Microprocessor

Scholar QV™ heat pumps use a factory installed PLC microprocessor to control the operation, the safety switches and function options. LED's show operational status and provide assistance with diagnosis if troubleshooting is ever required. Various control functions are field selectable. The PLC is also capable of communicating to PLC's in other Scholar units to allow run time leveling and does not require additional equipment installed in the Scholar QV unit. The PLC microprocessor provides improved reliability because of the reduction of components, the components utilized are more durable and the control box wiring has been simplified. Pertinent statistical data about the life of the refrigeration system can be accessed through the PLC.

The PLC microprocessor provides for the following control and operation functions:

- **Anti-Short Cycle Timer** - Prevents the compressor from destructive short cycling due to momentary power interruptions. One of three time intervals can be field selected.

- **Defrost Timer (heat pumps only)** - Adjustable defrost control that is based upon both time and temperature. The time interval is adjustable from 30 to 90 minutes in one minute increments.

- **BAS Control Relay** - Provides 24 VAC coil to control operation from Building Automation System (BAS). Note - an additional BAS control relay can be added when 120 or 240 VAC coils are required.

B. High and Low Refrigerant Pressure and Loss of Charge Switches

These switches render the compressor and outdoor fan motor inoperative whenever the limits of the pressure switches are exceeded. In the event of high pressure, the Scholar QV™ heat pump or air conditioner will turn off and lockout.

The low pressure (A/C) and loss of charge (HP) switch is bypassed for 8-1/2 minutes during each start-up. The system will lockout if the low pressure switch opens three times within one hour or if it does not reset within 8-1/2 minutes of the Scholar QV™ heat pump or air conditioner start-up.

The high and low pressure and loss of charge switches are resettable at the wall thermostat or by turning power off and then on to the Scholar QV™ heat pump or air conditioner. A fault LED located on the PLC indicates that a lockout has occurred and whether it is due to high or low refrigerant pressure.

C. Heat Related Controls

The **outdoor thermostat (heat pump only)**, factory set at 40°F, determines the tem-

perature at which the supplemental electric heat (or wet heat) turns on to heat the classroom. The temperature set point can be adjusted in the field for local conditions. When the outdoor thermostat activates wet heat, the compressor simultaneously turns off.

The **electric heat control (heat pump only)** allows the user to select whether the electric heat operates simultaneously with the compressor. On the 2, 2 ½, 3 and 3 ½ ton heat pumps, the units are wired at the factory for simultaneous operation. For non-simultaneous operation, a wire is moved from one terminal to another in the control box. On 4 & 5 ton units, a toggle switch in the control box controls this function. In the "NORM" position, electric heat can operate simultaneously with the compressor. In the "S circuit" position, electric heat does **not** operate any time the compressor is operating.

The **electric heat during defrost (heat pump only)** allows the user to select whether electric heat operates when the heat pump enters into the defrost mode. On the 2, 2 ½, 3 and 3 ½ ton heat pumps, the units are wired at the factory to prevent the electric heaters from operating during the defrost mode. For operation during defrost, a wire is moved from one terminal to another in the control box. On 4 & 5 ton units, a toggle switch in the control box controls this function. In the "EHDD" position, electric heat will operate in the defrost mode. In the "NORM" position, electric heat does **not** operate in the defrost mode. NOTE: for operation of the electric heat during defrost, the electric heat control must be configured to allow simultaneous operation of the electric heat and the compressor.

D. The **indoor blower fan speed control** provides adjustable air volume from the indoor blower.

IMPORTANT
MINIMUM AIR FLOW IS REQUIRED FOR PROPER OPERATION.

E. **The motorized fresh air damper with PowerVent and GreenWheel® ERV** ventilation options are equipped with a **fresh air fan speed control**. The fresh air fan speed control controls both the ventilation intake and exhaust blowers together, automatically balancing the intake and exhaust cfm up to 450 cfm.

1.04A THERMOSTATS, THERMOSTAT GUARDS AND HUMIDITY CONTROLLERS

A. Scholar QV™ heat pumps with two stages of heat have the following thermostats available.

1. **Digital, 7 day, 5-2 and 5-1-1 day programmable thermostat** (p/n 50107). Two stage heat/Two stage cool. Manual or auto changeover. Fan: Auto & On. Permanent retention of setting on power loss. Field adjustable temperature calibration. Adjustable max. setpoint for heating and min. adjustable setpoints for cooling. Adjustable temperature differential. Keypad lockout. Status LED. °F or °C selectable. Title 24 compliant.

2. **Digital, non-programmable thermostat** (p/n 50252) Two stage heat/Two stage cool. Manual or auto changeover. Fan: Auto & On. Permanent retention

of setting on power loss. Field adjustable temperature calibration. Adjustable max. setpoint for heating and min. adjustable setpoints for cooling. Adjustable temperature differential. Keypad lockout. Status LED. °F or °C selectable.

3. **Internal electronic programmable thermostat** (p/n S/02792) (factory installed) with automatic changeover, has two stages of heating and one stage of cooling and a fan switch. System mode switch has OFF, COOL, AUTO, HEAT, and EM.HT. settings. Fan mode switch has OFF and AUTO settings. This thermostat may be used with systems that have no heat, electric resistance, a hot water coil coil.

4. **Digital, 7 day, 2 occupied & 2 unoccupied periods for each day of the week programmable thermostat** (p/n 50248). Three stage heat/Three stage cool. Manual or auto changeover. Fan: Auto & On. Ten year retention of programming settings and 48 hour clock and day settings on power loss. Adjustable max. set-point for heating and min. adjustable setpoints for cooling. Adjustable temperature differential. Keypad lockout. Status LED. °F or °C selectable. Optional remote sensors for outdoor air, supply air and humidity. Title 24 compliant.

5. The **direct digital control** (DDC) interfaces with the building automation system (BAS) is to be defined by the specifier, in consultation with the Marvair® sales representative. Marvair will factory install the **DDC** sent by the DDC manufacturer, and purchased by the customer. Due to the specialized nature of DDC controls applied to specific building automation systems, pricing for the Scholar QV™ Heat Pump with custom controls will be based on the customer requirements for additional controls components (materials and installation) and engineering by Marvair.

6. **MAR7000 Energy Management System** provides a number of functions while remaining extremely cost sensitive. For a complete description of the operation and features of the MAR7000 EMS, please see the MAR7000 Product Data Sheet.

B. Scholar QV™ air conditioners or heat pumps with one stage of heat.

1. **Digital, non-programmable thermostat** (p/n 50121). One stage heat, one stage cool. Fan switch: Auto & On. Manual changeover system switch: Cool-Off-Heat. Low temperature protection. °F or °C selectable. Thirty minute power loss memory retention.

2. **Digital, seven day programmable thermostat** (p/n 50123). One stage heat, one stage cool. Fan switch: Auto & On. Auto-changeover. Keypad lockout. Non-volatile program memory. Title 24 compliant.

3. **Digital, non-programmable thermostat** (p/n 50186). One stage cool/one stage heat. Manual or auto changeover. Fan mode: Auto or On. Permanent retention of settings upon power loss. Field adjustable temperature calibration. Max heat and minimum cool set points. Adjustable temperature differential. Remote sensor capable. Keypad lock out. Status LED. °F or °C selectable.

C. Thermostat guards.

1. **Clear thermostat guard with keylock & clear plastic cover & base** (p/n 50092). For use with 50121, 50123, 50186, 50107 & 50252 thermostats.
2. **Clear thermostat guard with keylock & clear plastic cover & base** (p/n 50119). For use with 50248 thermostat.

D. Humidity Controller

1. **Digital humidity controller,** (p/n 50254). To be used with units with hot gas or electric reheat. Programmable dehumidistat, ventilation control. Time of day can be set for dehumidifier or ventilation to run. Permanent memory retention of set points. Humidity sensor can be field calibrated. High & low dehumidification set points. Outdoor temperature and humidity sensor included. ºF or ºC selectable.

1.04B OPTIONAL CONTROLS

A. All units have the following control options available.

1. The **spring wound timer** is a field installed kit used to enable operation of the heat pump for up to six hours, or override the building automation system. (p/n 08557)

2. The **hard start kit** is field installed and used on single phase power models to overcome hard starting conditions. Note: Hard start kits are generally not recommended for use on scroll compressors.

3. The **motorized fresh air damper with PowerVent and GreenWheel® ERV** ventilation options can be equipped with an exhaust fan air speed control, which controls the ventilation exhaust blower independent of the fresh air intake blower.

4. The **condensate pan and drain line heaters** are required for heat pump installations north of the 34° latitude line (see figure below) and other sites where condensate may freeze. The pan heaters prevent the condensate from freezing in the condensate pan and the drain line heaters prevent it from freezing in the drain lines. These heaters are factory installed and no field installation is required. See price pages for part numbers.

Pan Heaters and Condensate Heaters must be installed in units North of the 34° North Latitude Line Shown and Noted by the Following Cities: Columbia, SC; Atlanta, GA; Gadsden, AL; Tupelo, MS; Pine Bluff, AR; Lubbock, TX; Roswell, NM; Phoenix, AZ; and Los Angeles, CA.

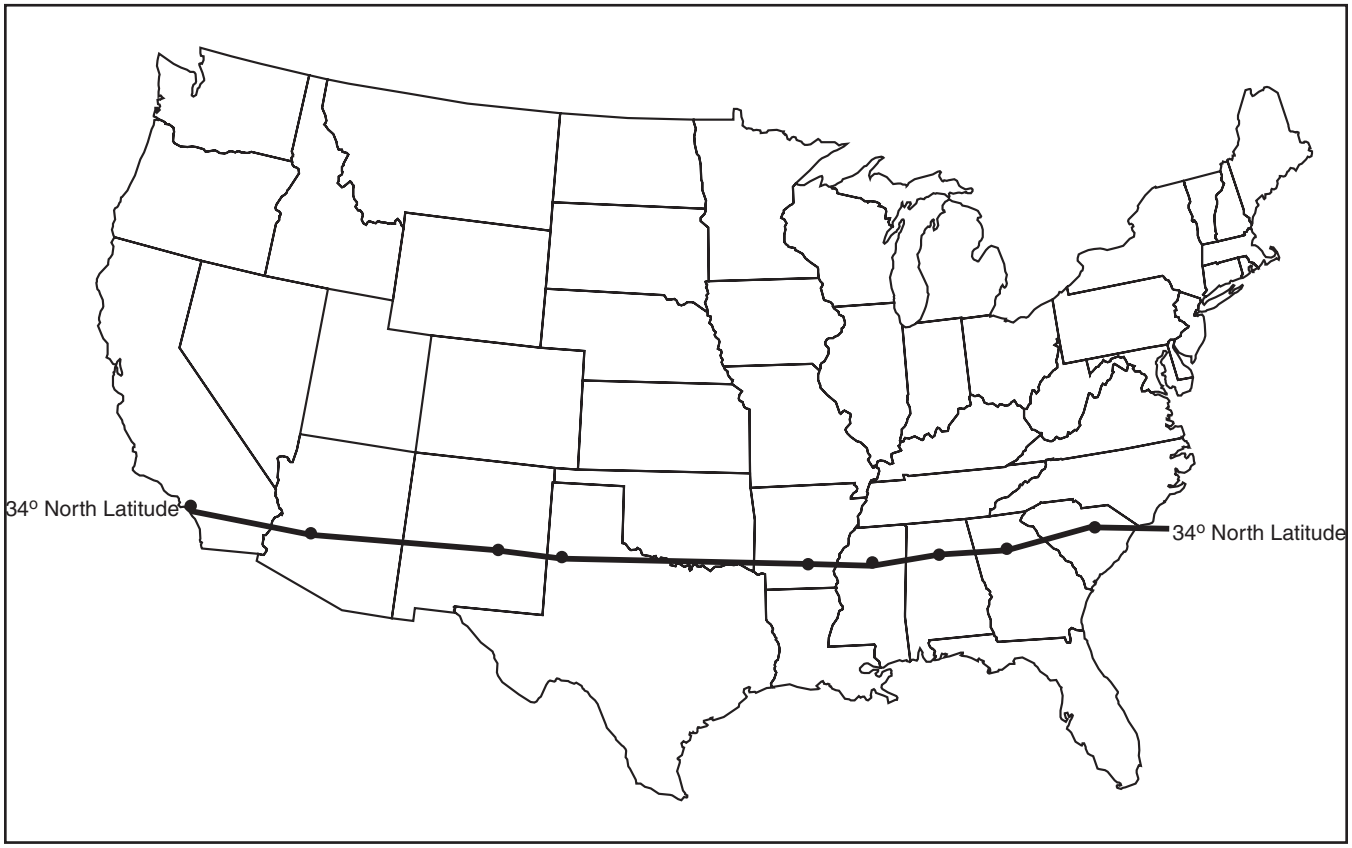

1.05 LOCATION PREPARATION

⚠ WARNING

THE SCHOLAR QV™ HEAT PUMP AND AIR CONDITIONER MUST BE INSTALLED IN CONFORMANCE WITH ALL APPLICABLE LOCAL AND NATIONAL ELECTRICAL, PLUMBING AND BUILDING CODES.

A. The Scholar QV™ heat pump and air conditioner must be installed on an outside wall for access to outside air. The wall opening dimensions are shown in Figure 2. It must not interfere with any windows or doors to the outside. The outdoor air path must not be impeded by shrubbery or other obstructions. Do not locate the Scholar QV heat pump or air conditioner where noxious fumes or gas can be drawn in from the outdoor air and introduced in the classroom.

The Scholar QV™ heat pump or air conditioner must be installed on a hard, level, smooth surface such as concrete, wood or tile. Do not install the unit on a carpeted surface.

To remove carpet from where the "footprint" of the unit will be, when installed, carefully measure, cut and remove carpet from an area based on the dimensions of the Scholar QV cabinet as described in Figures 3 and 4; and allowing for any offset or standoff from the finished interior surface of the wall.

Prior to installation of the Scholar QV™ heat pump or air conditioner, provisions are to be made for the following, as appropriate.

1. **Wall opening** dimensions for the Scholar QV™ heat pump and air conditioner are as shown in Figure 2. The unit is designed for installation through a 14 inch thickness finished wall. For finished wall depth less than 14 inches, the unit will stand off from the interior finished wall and it will be necessary to order and install trim pieces to provide a finished, color coordinated enclosure that fits flush to the interior wall.

Figure 2. Wall Opening Dimensions for Scholar QV™ Heat Pump and Air Conditioner.

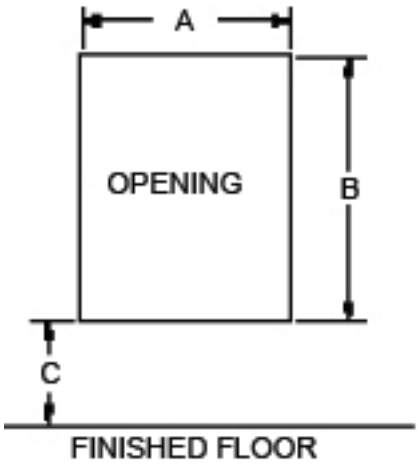

MODEL	24/30/36/40	49	60
A	36.75	47.25	47.25
B	48.00	59.75	59.75
C	32.00	32.00	32.00
C*	36.00	36.00	36.00

When 4"high base stand is used, the C dimension is specified.
Dimensions are in inches.

1.06 POWER AND CONTROL WIRING (ROUGH-IN)

A. **Line voltage power supply** must be sized to provide adequate power for the operation of the specific model heat pump and, if chosen, the electric heat option. Information on line power requirements, line sizing and fuse sizing is shown on data label on unit. The power leads can enter the heat pump or air conditioner either through the bottom or rear. The locations of the knockouts for power leads are shown in Figures 3 and 4. Depending on the location of the Scholar QV heat pump or air conditioner relative to the outside wall, the exact rough-in location for power lines in the school room can be determined. Six feet of power line should be available inside the cabinet for routing and connecting the power lines, after the Scholar QV unit is installed. If entry is from bottom, the stub-out should be no higher than 1/2” from the classroom floor to allow the unit to slide into the wall opening.

IMPORTANT
IF “S CIRCUIT” POSITION IS SELECTED ON THE ELECTRIC HEAT CONTROL (SEE ARTICLE 1.11), LOWER MINIMUM CIRCUIT AMPACITY MAY BE PERMITTED.

B. **Low voltage wiring** can be roughed in to either the back (outside wall) or bottom (floor) of the cabinet. Six feet of low voltage wire should be available for routing and termination within the unit. If the entry is from the bottom, the stub-out should be no higher than 1/2” from the classroom floor to allow the Scholar QV heat pump and air conditioner to slide into the wall opening. Reference Figures 3 and 4 as noted above, for control wiring entry points into the cabinet.

Figure 3. Scholar QV™ Heat Pump and Air Conditioner Models VAHA24/30/36/40 Dimensional Data

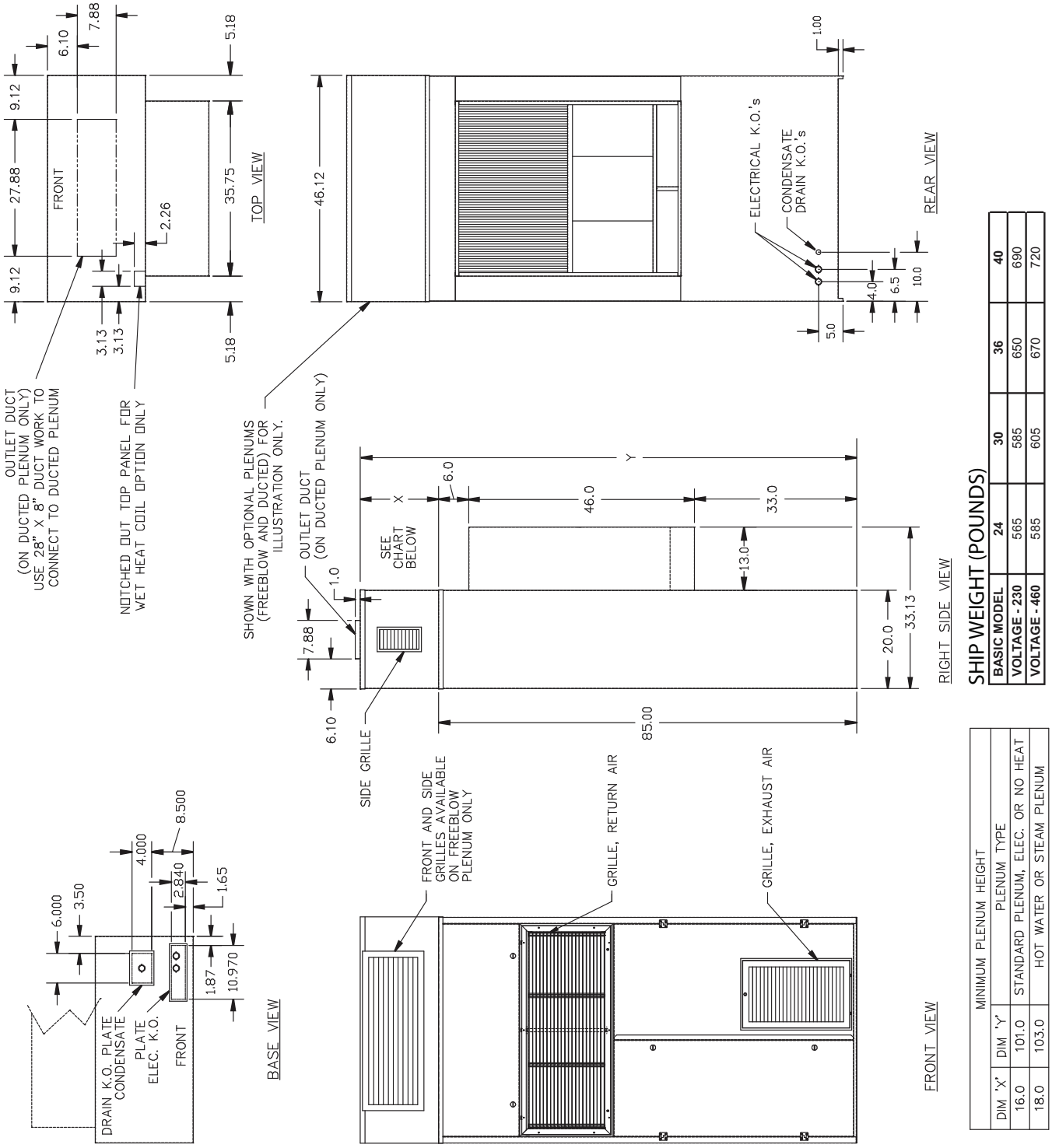

SHIP WEIGHT (POUNDS)

BASIC MODEL	24	30	36	40
VOLTAGE - 230	565	585	650	690
VOLTAGE - 460	585	605	670	720

MINIMUM PLENUM HEIGHT		
DIM 'X'	DIM 'Y'	PLENUM TYPE
16.0	101.0	STANDARD PLENUM, ELEC. OR NO HEAT
18.0	103.0	HOT WATER OR STEAM PLENUM

Figure 4. Scholar QV™ Heat Pump and Air Conditioner Models VAHA49/VACA60 Dimensional Data

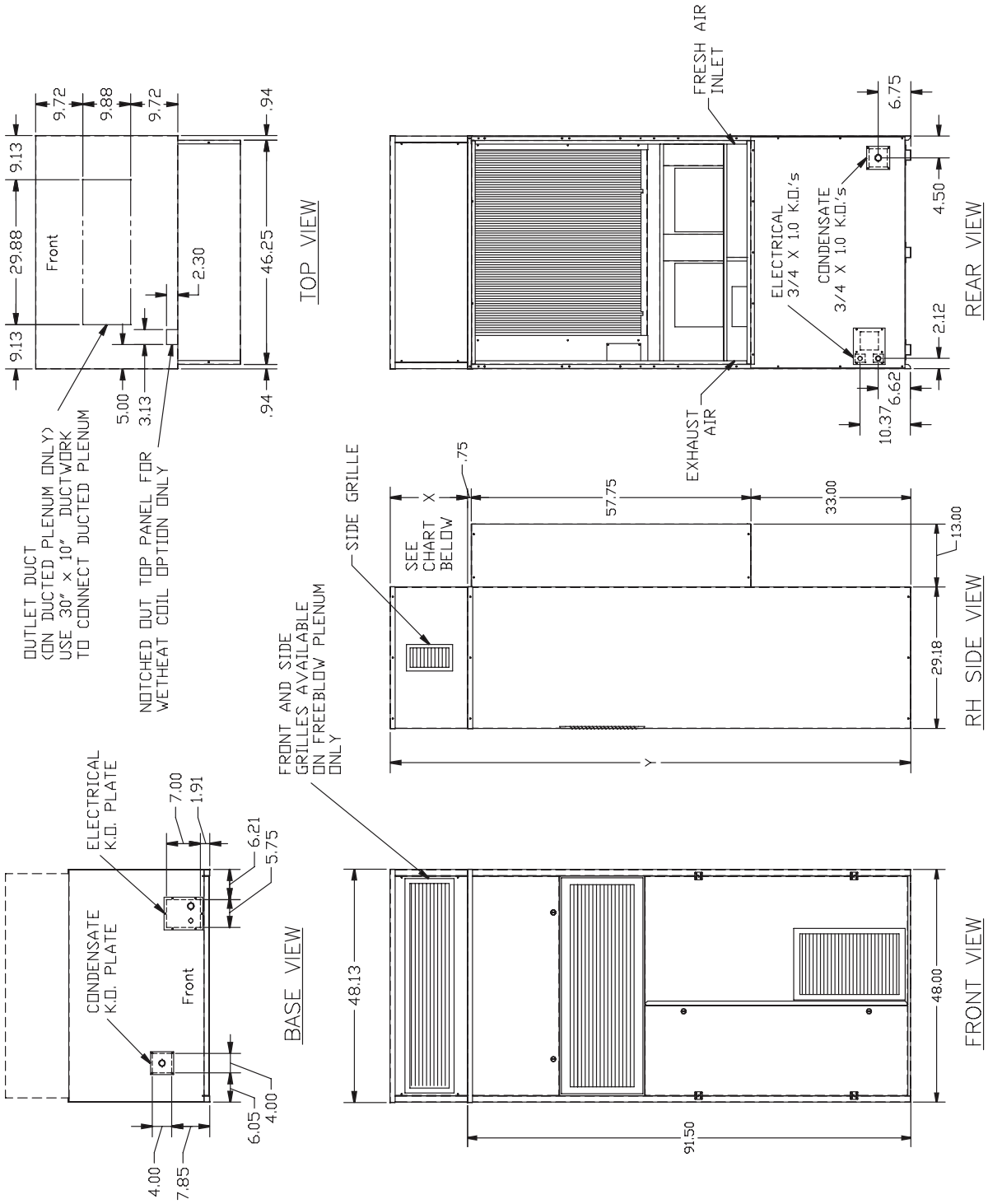

SHIP WEIGHT (POUNDS)

BASIC MODEL	49	60
VOLTAGE - 230	935	960
VOLTAGE - 460	960	985

MINIMUM PLENUM HEIGHT		
DIM 'X'	DIM 'Y'	PLENUM TYPE
16.0	107.5	STANDARD PLENUM, ELEC. OR NO HEAT
18.0	109.5	HOT WATER OR STEAM PLENUM

1.07 CONDENSATE DRAIN LINE (ROUGH-IN)

A. The condensate drain line can be roughed in to drain the Scholar QV™ heat pump or air conditioner from either the back (outside) or the bottom (floor). The locations for the condensate stub-outs can be determined from the cabinet knockouts identified in Figures 3/4/5. The factory installed condensate connection within the cabinet is a female PVC fitting designed for a 3/4" slip connection.

⚠ CAUTION

INSPECT THE FLEXIBLE CONDENSATE DRAIN LINE INSIDE THE SCHOLAR QV™ UNIT (WHEN INSTALLED) FOR POSSIBLE TUBING COLLAPSE. CORRECT AS APPROPRIATE.

TO PREVENT CONDENSATE FROM RUNNING DOWN THE INTERIOR OF THE WALL, INSTALL FLASHING UNDER THE OUTDOOR AIR BOX OVER THE SILL OF THE WALL OPENING. ROUTE THE CONDENSATE DRAIN AWAY FROM THE SCHOLAR QV™ UNIT WITH SUFFICIENT DOWNWARD SLOPE TO INSURE ADEQUATE DRAINAGE.

1.08 WET HEAT (ROUGH-IN)

A. **Hot water coil** connections are made by dropping supply and return lines through the knockout locations in the top of the plenums, as described in Figures 3/4/5 for the heat pump. Access to the interior cabinet is through these factory-notched locations.

1.09 PREPARATION OF THE SCHOLAR QV™ HEAT PUMP AND AIR CONDITIONER

⚠ WARNING

TO AVOID PERSONAL INJURY, ADEQUATE PROTECTIVE CLOTHING MUST BE WORN AND PRECAUTIONS IN HANDLING AND INSTALLING THIS EQUIPMENT MUST BE PRACTICED AT ALL TIMES.

After the rough-in is complete, the Scholar QV™ heat pump or air conditioner and accessories must be prepared for final installation prior to start-up. The following items are to be completed prior to final installation.

A. Remove the lower front panel of the Scholar QV™ heat pump or air conditioner for access to the shipping skids. Unscrew the four hold-down lag bolts from the inside of the unit.

Remove the shipping skids from under the Scholar QV™ heat pump or air conditioner. The air box brace will come off with removal of the skids.

B. If the base stand accessory was chosen, install the base stand in accordance with installation instructions included with the base stand or see Appendix B at end of manual.

C. Hot Water Plenum. The protective film on top of the Scholar QV™ cabinet and on the plenum must be removed to install the plenum. Fasten the plenum to the top of the cabinet in accordance with the instructions included with the plenum or Appendix C at end of manual.

D. Electric Heat. Remove the metal shipping plate from the electric heat assembly mounted on top of the cabinet. Reference the tag affixed to the shipping plate on top of the cabinet for directions, and shown in Figure 6.

Figure 6. Tag for Plate Removal Attached to Protective Plate on Electric Resistance Heat Element at Top of the Scholar QV™ Cabinet.

ATTENTION: "INSTALLER"
REMOVE PROTECTIVE SHIPPING PLATE OVER ELECTRIC HEATER BEFORE CONNECTING POWER TO UNIT. CHECK FOR DAMAGE.

E. Freeblow Plenum/Ducted Plenum. Install plenum to top of cabinet after shipping plate has been removed from electric heater (if appropriate). Instructions are included with plenum or see Appendix C at end of manual.

The air distribution system which is field supplied and installed downstream of the specified **ducted plenum** must be engineered to assure sufficient air flow, even under adverse conditions, such as dirty filters. The information provided in Figure 1, Appendix A should be used to design the air distribution system duct size leaving the Scholar QV™ heat pump or air conditioner, keeping the external static pressure to a minimum.

Applications using duct work should be designed and installed in accordance with the current edition of the National Fire Protection Association codes and standards 90A and 90B. The duct system must be engineered to insure sufficient air flow through the unit to prevent over-heating of the heater element. This includes proper supply duct sizing, sufficient quantity of supply registers, adequate return and filter area. Ductwork must be of correct material and must be properly insulated. The duct work must be constructed of galvanized steel with a minimum thickness of .019. Ductwork must be firmly attached, secured and sealed to prevent air leakage. Do not use duct liner on inside of supply duct within four feet of the unit.

NOTE: Follow local codes and standards when designing duct runs to deliver the required airflow. Minimize noise and excessive pressure drops caused by duct aspect ratio changes, bends, dampers and outlet grilles in duct runs.

Galvanized metal duct extensions should be used to simplify connections to ductwork and grilles. Use fabric boots to prevent the transmission of vibration through the duct system. The fabric must be U.L. rated to a minimum of 197°F.

F. Install the outdoor louver/collar assembly to the outdoor side of the wall opening. The louver/collar assembly may be fastened to the air box (or air box extension) as described in the instructions for outdoor louvers/collars. The louver must be installed with the blades pointing downward on the outside and the louver and the collar must be water sealed to the outside wall surface with the appropriate caulking material. See the instructions that come with the outdoor louver for installation details or see Appendix F at the end of this manual.

G. Weather Panels are field supplied and do not come with the Scholar QV™ heat pump or air conditioner. If a weather panel covers the wall opening described in Figure 2, remove the weather panel prior to installing the unit into the wall opening.

H. After measuring for correct locations of power/control wiring entry, condensate drain line, and the appropriate wet heat lines, remove the appropriate knock-out access ports from the cabinet. Be sure they align with the rough-in points for the noted pipes and wires. Be sure electrical, condensate and wet heat piping will not cause interference or be damaged by sliding the Scholar QV heat pump or air conditioner into place.

IMPORTANT
BE SURE TO SEAL THE OPEN AREAS BETWEEN LINES ENTERING THE SCHOLAR QV™ CABINET AND THE KNOCKOUT OPENINGS, TO PREVENT AIR LEAKAGE.

I. If the heat pump or air conditioner is to fit flush against the inside of the exterior wall, cut to length, strips of open cell polyurethane foam 1” wide by 1/2” thick with adhesive backing, field supplied, on one side. This may be applied to the back of the heat pump and plenum along and flush with the two vertical and top horizontal edges. These strips will provide a finished appearance to the wall/heat pump interface and provide a seal between the equipment and wall. If the heat pump or air conditioner is applied with a side against a wall (in a corner), use the same strip material on the end panel along the side vertical edge.

J. Prior to sliding the Scholar QV™ heat pump or air conditioner into the wall opening, check to be sure that the floor surface is hard, smooth and level (concrete, wood, vinyl tile or the equivalent). If the floor is carpeted, cut out an appropriate “footprint” based on the Figure 3 or 4 or 5 drawings and the location of the unit relative to the inside finished wall (flush or offset). Be sure the surface is level or provisions are made to level the unit upon installation.

K. On 4 and 5 ton units, the outdoor air box must be field installed. Install the outdoor air box onto the back of the 4 and 5 ton Scholar™ QV heat pumps or air conditioners <u>before</u> sliding the unit into position. Apply a weather-proof sealant; i.e., silicone, onto the back of the Scholar QV heat pump or air conditioner prior to installing the outdoor air box to prevent water leaks.

1.10 INSTALLATION THROUGH THE OUTSIDE WALL.

A. Slide the Scholar QV™ heat pump or air conditioner into the wall opening slowly, being careful to clear the appropriate stubouts. The heat pump or air conditioner, when installed properly, should have a clearance between the air box outside edge and the finished outside wall as shown in Figure 7. Proper fit up of the louver/collar assembly to the air box to the outside wall requires the noted recess dimension to be maintained after installing the unit.

B. To minimize sound in the classroom, insulate all four sides of the outdoor air box that is internal to the classroom with the following:

Layer 1: 1/2” Rubatex
Layer 2: 1-1/2: Duct Board

Figure 7. Dimension Between Scholar QV™ Heat Pump or Air Conditioner Air Box and Finished Outside Wall for Outdoor Louver/Collar Assembly Installation

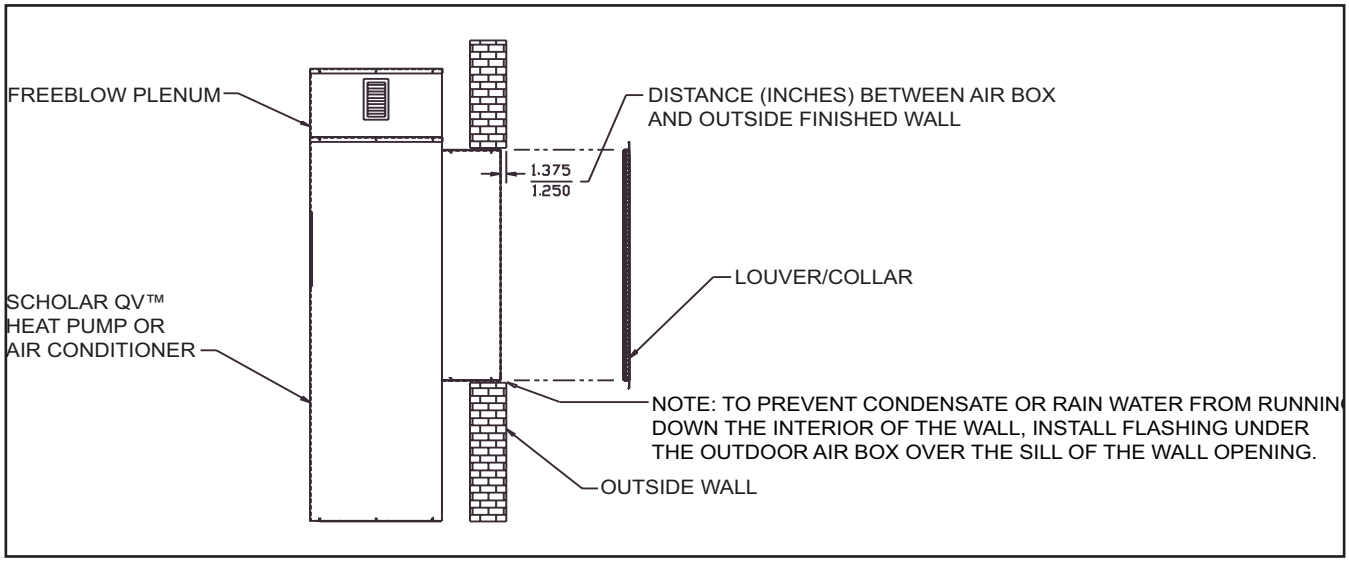

⚠ CAUTION

WHEN FASTENING LOUVER/COLLAR ASSEMBLY TO AIR BOX, DO NOT OVERTIGHTEN LOUVER SCREWS. OVERTIGHTENING SCREWS WILL CAUSE DAMAGE AND WARP THE LOUVER/COLLAR ASSEMBLY.

C. Check (with a spirit level) to see that the heat pump or air conditioner is level and plumb. If it is not, take the appropriate corrective action to level and plumb the system. 1/8” thick washers with 1/2” pass through holes can be installed appropriately under the fastener holes in the base of the heat pump or air conditioner to make the system level and plumb.

D. Secure the heat pump or air conditioner to the floor with appropriate field supplied fasteners, through the four 1/2” diameter through holes in the base.

E If the Scholar QV™ heat pump or air conditioner is offset from the outside wall, trim strips should be installed at this time. Check instructions that come with trim strips for installation or see Appendix D at end of this manual.

F. If appropriate, install wall brackets to the inside surface of the outside wall and to the cabinet of the Scholar QV™ unit, at this time. Check instructions with wall brackets for installation or see Appendix E at end of this manual.

1.11 ELECTRICAL, CONDENSATE AND WET HEAT HOOK-UPS

⚠ WARNING

ALL ELECTRICAL, PLUMBING, HOT WATER FITTING AND REFRIGERATION WORK MUST MEET THE REQUIREMENTS OF LOCAL AND NATIONAL CODES AND ORDINANCES. WORK SHOULD BE DONE ONLY BY PROFESSIONALLY QUALIFIED AND TRAINED SERVICE PEOPLE.

IMPORTANT

STUBOUTS SHOULD BE LOCATED (FROM THE FLOOR OR WALL) TO BE DIRECTLY OPPOSITE THE SELECTED CABINET KNOCKOUT ON THE CABINET, AS SHOWN IN FIGURES 3/4/5. THIS IS A REQUIREMENT IF A BASE STAND IS TO BE INSTALLED AND STUBOUTS ARE COMING THROUGH THE FLOOR.

A. 1. For line voltage wiring, the power supply must have the correct voltage, phase and ampacity for the selected Scholar QV™ unit. Check the data label on each Scholar QV unit to determine these values.

Be sure that the power to the line voltage wiring is off prior to hooking-up the wiring within the Scholar QV™ cabinet. Remove the lower front panel for access to the disconnect. Figure 8 illustrates the disconnect location with the lower front panel removed. **Turn the disconnect to "OFF" position.**

Remove the middle front panel for access to the control center. The electrical schematic for the heat pump or air conditioner is contained in a pocket on the inside of the middle front panel door. Figures 9 and 10 show typical control centers for the Scholar QV heat pump and air conditioner. Figures 11 and 12 show typical single and three phase wiring diagrams for the Scholar QV heat pump and air conditioner.

2. Power supply service must be with the allowable voltage range stamped on the identification plate. **To operate a nominal 230/208V model on 208V, change the transformer line tap from 240V to 208V, following the instructions on the electrical schematic.**

3. Connect the main power wires coming into the cabinet to the input side of the disconnect. (L1 and L2 for single phase units and L1, L2 and L3 for three phase models.) Install the ground wire on the ground lug.

⚠ CAUTION

THIS SYSTEM CONTAINS COMPONENTS THAT REQUIRE PHASING FOR CORRECT ROTATION. FAILURE TO OBSERVE ROTATION AND CORRECT ON START-UP WILL CAUSE DAMAGE NOT COVERED BY THE MARVAIR® WARRANTY.

Scroll compressors, like several other types of compressors, will only compress in one rotational direction. The direction of rotation is not an issue with single-phase compressors since they will always start and run in the proper direction. However, three phase compressors will rotate in either direction depending upon phasing of power. Since there is a 50-50 chance of connecting power in such a way as to cause rotation in the reverse direction, it is imperative to confirm that the compressor is rotating in the proper direction at the initial field start-up of the system. Verification of proper rotation is made by observing that the suction pressure drops and the discharge pressure rises when the compressor is energized. An alternate method of verification for self contained system with small critical refrigerant charges, where the installation of gauges may be objectionable, can

be made by monitoring the temperature of the refrigerant lines at the compressor. The temperature should rise on the discharge line while the suction line temperature decreases. Reverse rotation also results in a substantially reduced current draw when compared to tabulated values.

There is no negative impact on durability caused by operating three phase compressors in the reversed direction for a short duration of time, usually defined as less than one hour. However, after several minutes of operation the compressor's internal protector will trip. The compressor will then cycle on the protector until the phasing is corrected. Reverse operation for longer than one hour may have a negative impact on the bearings.

B. 1. Low voltage wiring must be class 1.

2. For Scholar QV™ units with a remote (wall mounted) thermostat, route the low voltage wiring from the point of entry into the cabinet, upward through the raceway adjacent to the disconnect shown in Figure 8.

Route wires into the terminal strip compartment through the openings provided. Connect wiring to the terminal strip as shown in Figure 13 for a remote, wall mounted thermostat installation.

Figure 8a. Front View of Models 24/30/36/40 with Front Doors Open

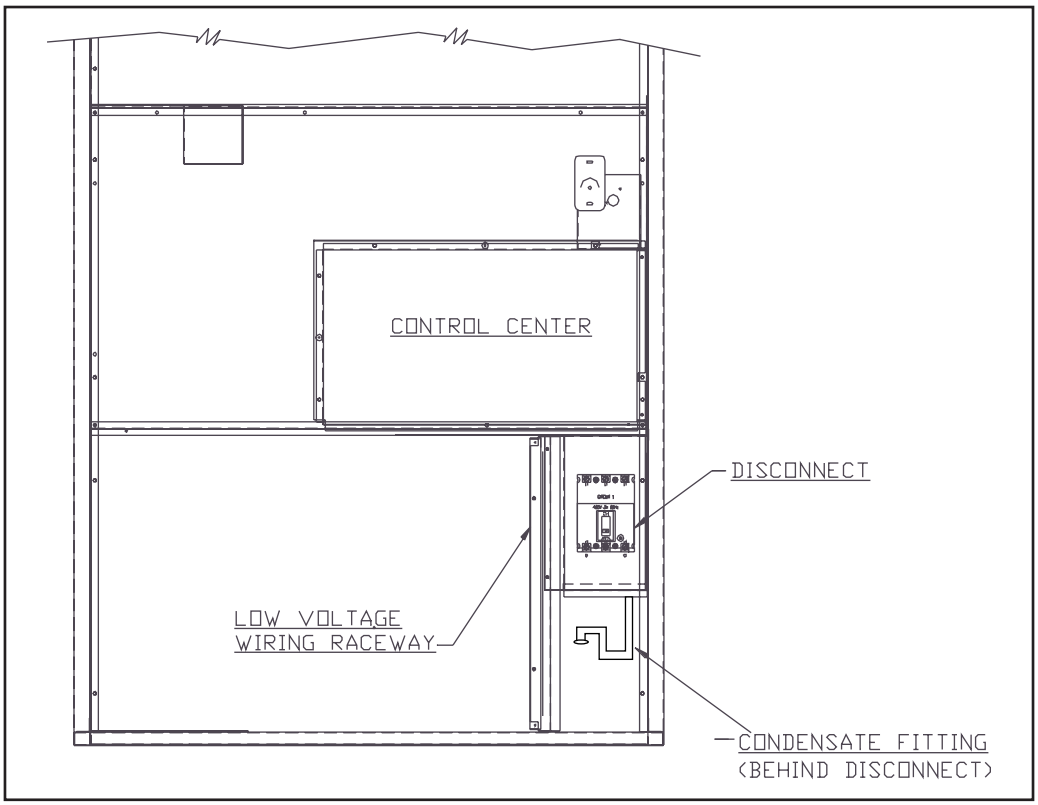

Figure 8b. Front View of Models 49/60 with Front Doors Open

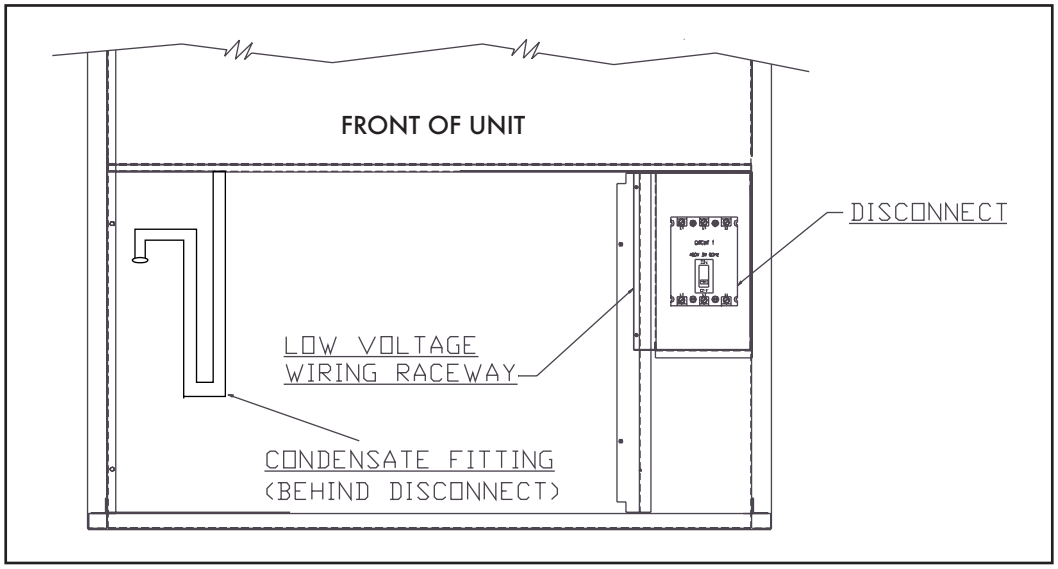

Figure 9. Typical Control Center Layout for Air Conditioner Models 24/30/36/40

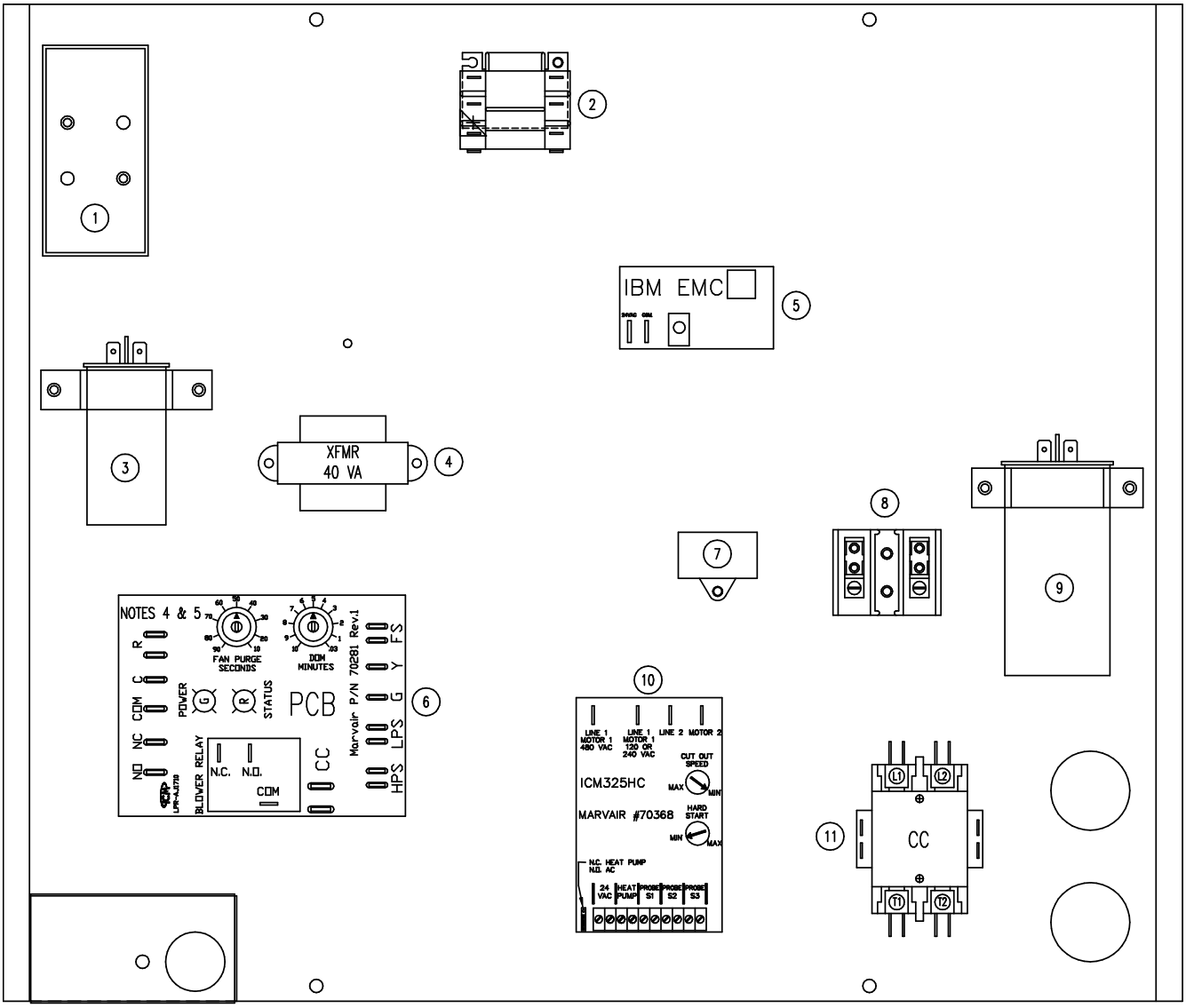

NUMBER	PART DESCRIPTION	ID	PART NUMBER
1	FAN SPEED CONTROL	FSC	70049
2	VENT MOTOR RELAY	VMR	50205
3	OUTDOOR BLOWER CAPACITOR	OFM C	50235
4	TRANSFORMER	XFMR	50141
5	ELECTRONIC MOTOR CONTROLLER	EMC	70363
6	PRINTED CIRCUIT BOARD	PCB	70281
7	VENT CAPACITOR	VM	50256
8	TERMINAL STRIP	R / C	80812 *
9	COMPRESSOR CAPACITOR	COMP C	
	(24) 35@370		50280
	(30) 40@370		50315
	(36) 45@370		50321
	(40) 45@370		50321
10	COMPRESSOR CONTACTOR	CC	50030
11	HEAD PRESSURE CONTROLLER	HPC	70368

Due the wide variety of options, the control center in your unit may have different components from what is shown.

Figure 10. Typical Control Center Layout for Air Conditioner Models 49/60

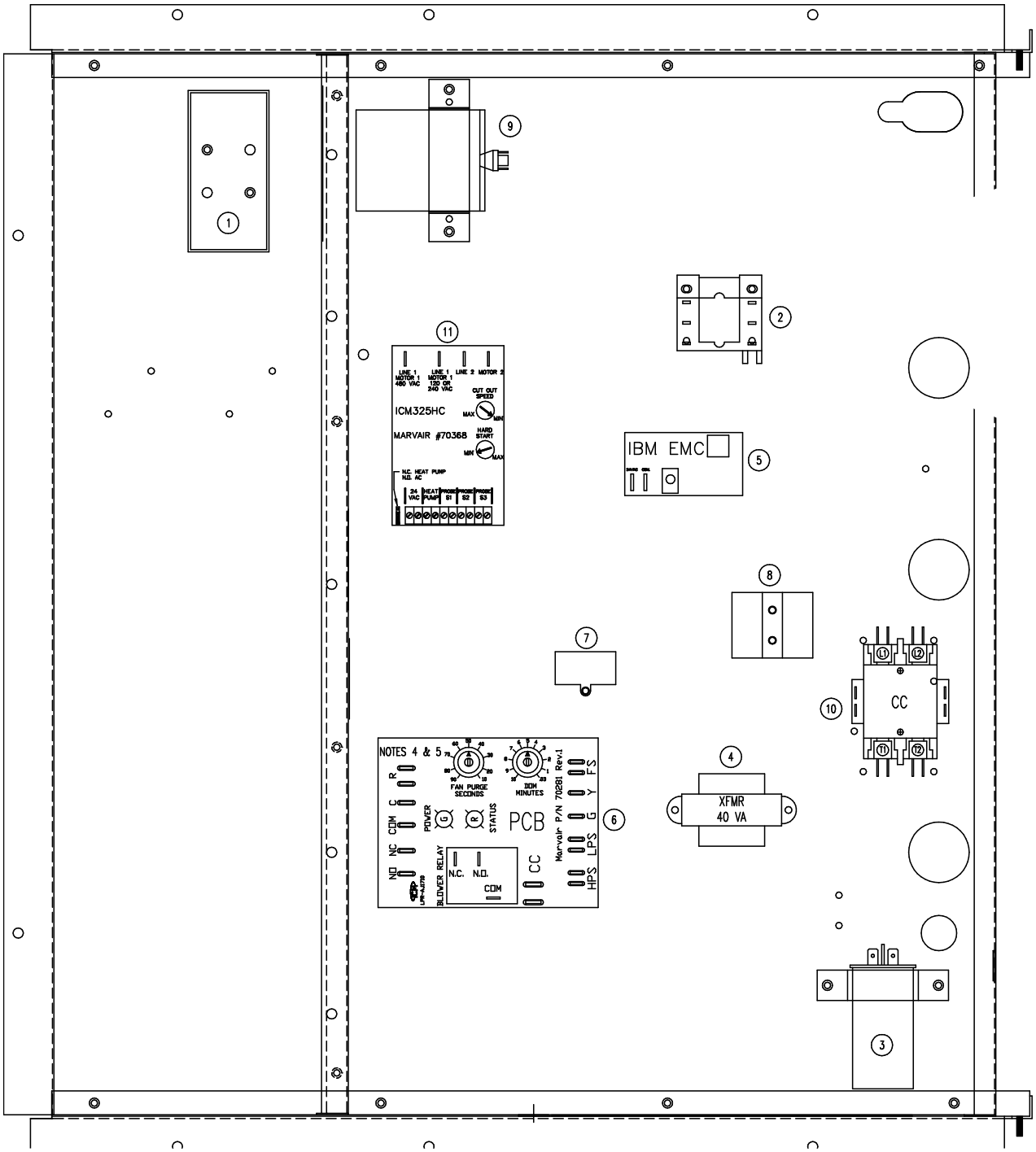

NUMBER	PART DESCRIPTION	ID	PART NUMBER
1	FAN SPEED CONTROL	FSC	70049
2	VENT MOTOR RELAY	VMR	50205
3	OUTDOOR BLOWER CAPACITOR	OFM C	50235
4	TRANSFORMER	XFMR	50141
5	ELECTRONIC MOTOR CONTROLLER	EMC	70363
6	PRINTED CIRCUIT BOARD	PCB	70281
7	VENT CAPACITOR	VM	50256
8	TERMINAL STRIP	R / C	80812 *
9	COMPRESSOR CAPACITOR	COMP C	
	(49) 70@440		50327
	(60) 40@370 QTY. 2		50315
10	COMPRESSOR CONTACTOR	CC	50030
11	HEAD PRESSURE CONTROLLER	HPC	70368

Due the wide variety of options, the control center in your unit may have different components from what is shown.

Figure 11a. Typical Wiring Schematic for Heat Pump Model, Single Phase Power

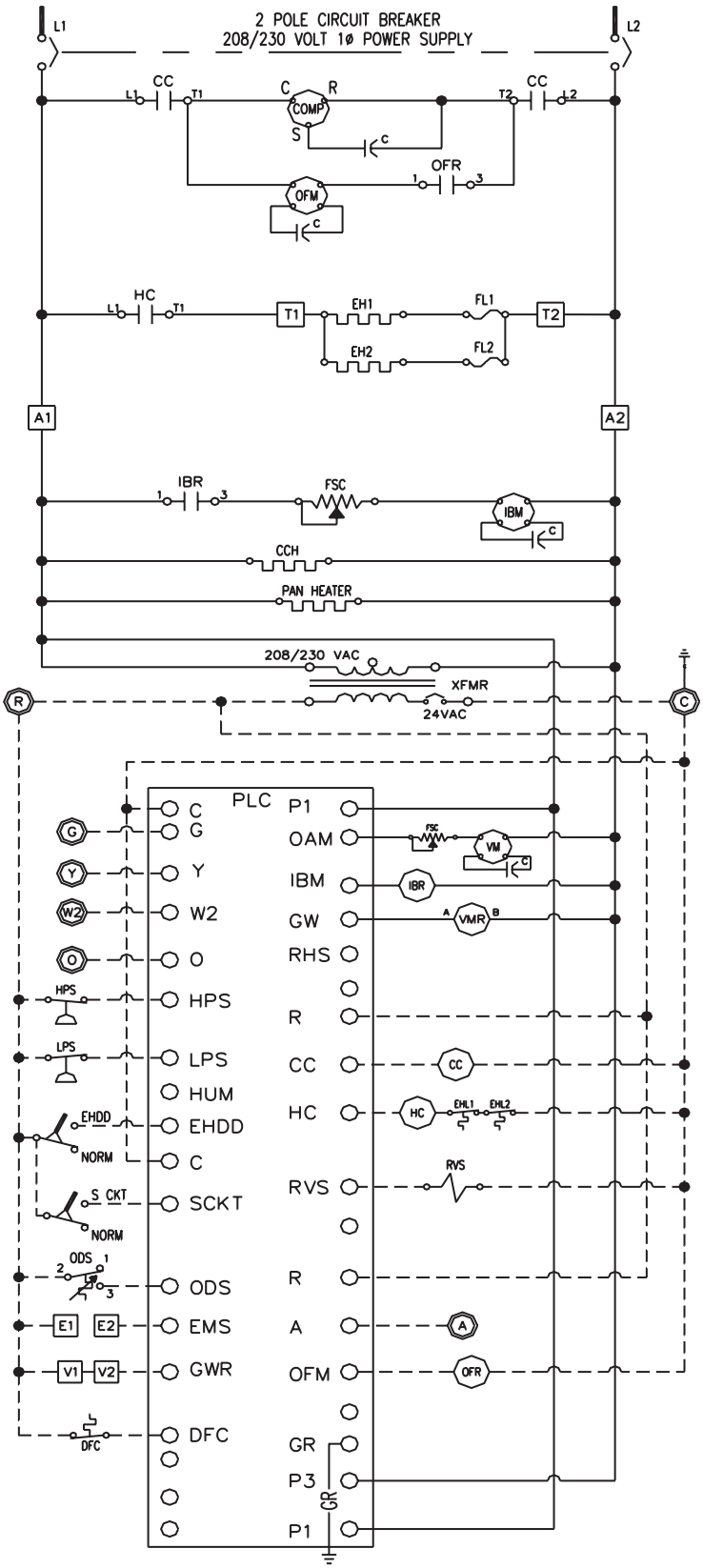

ELECTRICAL LEGEND:

C	CAPACITOR
CC	COMRPESSOR CONTACTOR
CCH	CRANKCASE HEATER
COMP	COMPRESSOR
DFC	DEFROST CONTROLLER
EH	ELECTRIC STRIP HEATER
EHL	ELECTRIC HEAT LIMIT
HC	HEAT CONTACTOR
HPS	HIGH PRESSURE SWITCH
IBM	INDOOR BLOWER MOTOR
IBR	INDOOR BLOWER RELAY
LPS	LOW PRESSURE SWITCH
OFM	OUTDOOR FAN MOTOR
OFR	OUTDOOR FAN RELAY
PLC	PROGRAMMABLE LOGIC CONTROLLER
RVS	REVERSING VALVE SOLENOID
VM	VENT MOTOR
XFMR	TRANSFORMER

Due the wide variety of options, the control center in your unit may have different components from what is shown.

Figure 11b. Typical Wiring Schematic for Air Conditioner Model, Single Phase Power

SCHEMATIC DIAGRAM

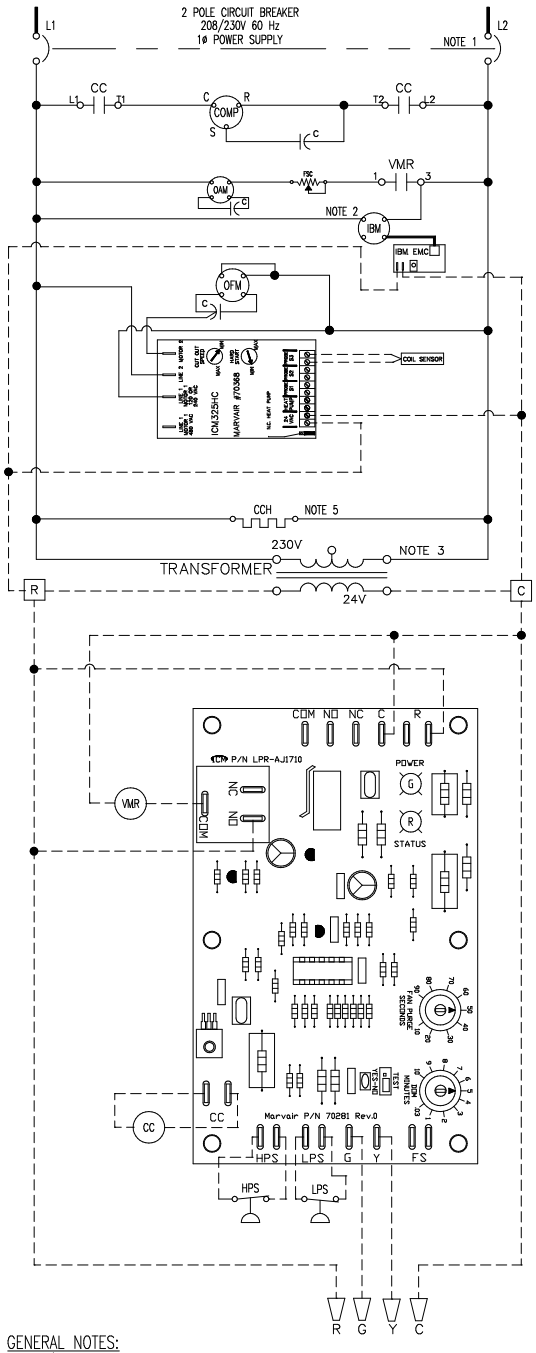

ELECTRICAL LEGEND:

C	CAPACITOR	VM	VENT MOTOR
CC	COMRPESSOR CONTACTOR	VMR	VENT MOTOR RELAY
COMP	COMPRESSOR	XFMR	TRANSFORMER
FSC	FAN SPEED CONTROL		
HPS	HIGH PRESSURE SWITCH		
IBM	INDOOR BLOWER MOTOR		
IBR	INDOOR BLOWER RELAY		
LPS	LOW PRESSURE SWITCH		
OFM	OUTDOOR FAN MOTOR		
PCB	PRINTED CIRCUIT BOARD		

VOLTAGE LEGEND

- LINE VOLTAGE FACTORY
- LINE VOLTAGE FIELD
- LOW VOLTAGE FACTORY
- LOW VOLTAGE FIELD
- ALT. VOLTAGE (FIELD SPEC.)

COLOR CODE

BK	BLACK	O	ORANGE
BL	BLUE	R	RED
BR	BROWN	Y	YELLOW
G	GREEN	WHT	WHITE
GY	GRAY		
BK/RED	BLACK WITH RED STRIPE		

GENERAL NOTES:

1. 208/230 VOLT 60Hz 1ø POWER SUPPLY. SEE DATA PLATE FOR AMPACITY AND FUSE SIZE. OPTIONAL CKT BKR SHOWN.
2. FACTORY PROGRAMMED ECM MOTOR.
3. TRANSFORMER IS FACTORY WIRED FOR 230 VOLT OPERATION. FOR LOWER VOLTAGES, INTERCHANGE
4. COMPRESSOR TIME DELAY AND FAN PURGE DELAY ARE LOCATED ON THE PCB (PRINTED CIRCUIT BOARD) AND ARE ADJUSTABLE.
5. THE (STATUS LED) WILL BLINK ONE TIME AFTER THE HPS (HIGH PRESSURE SWITCH) HAS OPENED TWICE AND THE UNIT WILL LOCKOUT.
   THE (STATUS LED) WILL BLINK TWICE AFTER THE LPS (LOW PRESSURE SWITCH) HAS OPENED TWICE AND THE UNIT WILL LOCKOUT.
6. WIRES ARE MARKED FOR PROPER THERMOSTAT CONNECTIONS.
   R = 24VAC C = 24VAC COMMON
   Y = COMPRESSOR
   G = BLOWER
7. THE UNIT CONTROL SYSTEM IS FACTORY WIRED TO ENERGIZE THE VENTILATION PACKAGE ANYTIME THE INDOOR FAN/BLOWER IS ENERGIZED.

Due the wide variety of options, the control center in your unit may have different components from what is shown.

Figure 12a. Typical Wiring Schematic for Heat Pump Model, Three Phase Power

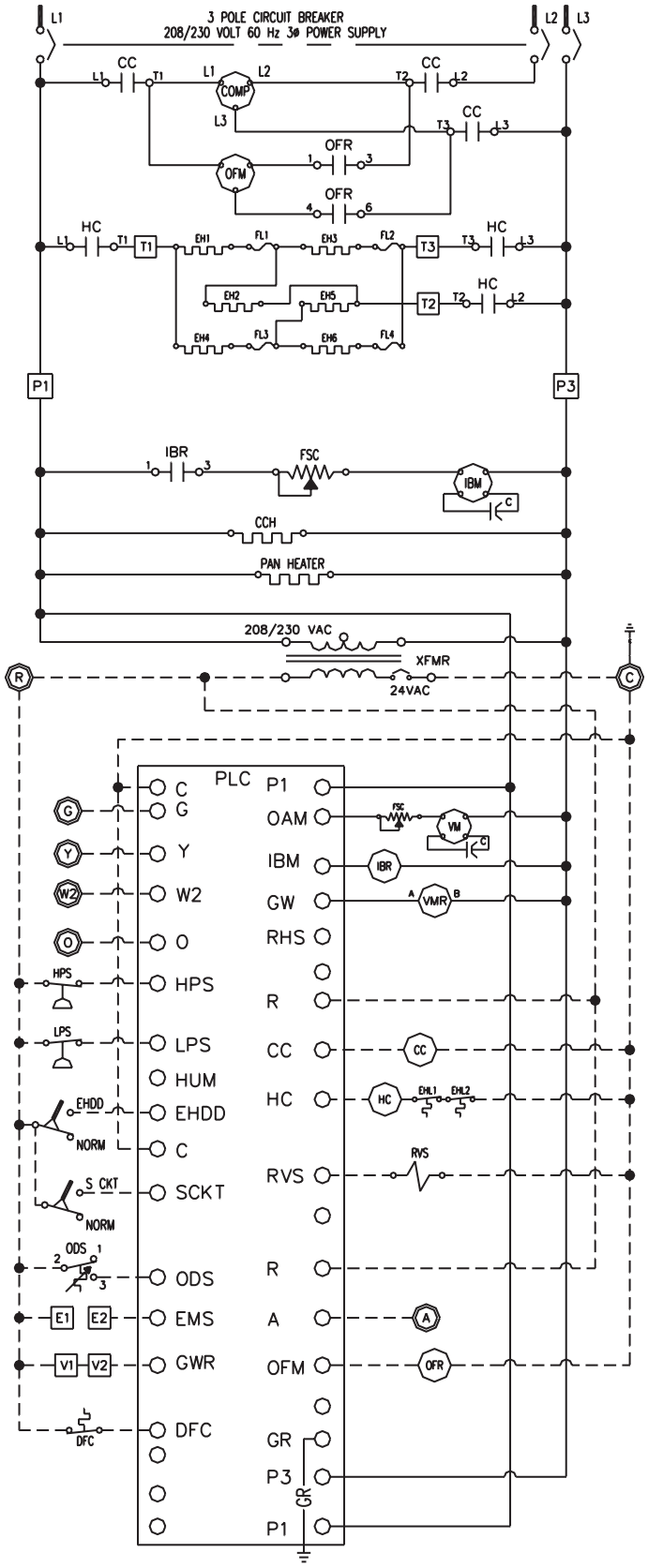

ELECTRICAL LEGEND:

C	CAPACITOR
CC	COMRPESSOR CONTACTOR
CCH	CRANKCASE HEATER
COMP	COMPRESSOR
DFC	DEFROST CONTROLLER
EH	ELECTRIC STRIP HEATER
EHL	ELECTRIC HEAT LIMIT
HC	HEAT CONTACTOR
HPS	HIGH PRESSURE SWITCH
IBM	INDOOR BLOWER MOTOR
IBR	INDOOR BLOWER RELAY
LPS	LOW PRESSURE SWITCH
OFM	OUTDOOR FAN MOTOR
OFR	OUTDOOR FAN RELAY
PLC	PROGRAMMABLE LOGIC CONTROLLER
RVS	REVERSING VALVE SOLENOID
VM	VENT MOTOR
XFMR	TRANSFORMER

Due the wide variety of options, the control center in your unit may have different components from what is shown.

Figure 12b. Typical Wiring Schematic for Air Conditioner Model, Three Phase Power

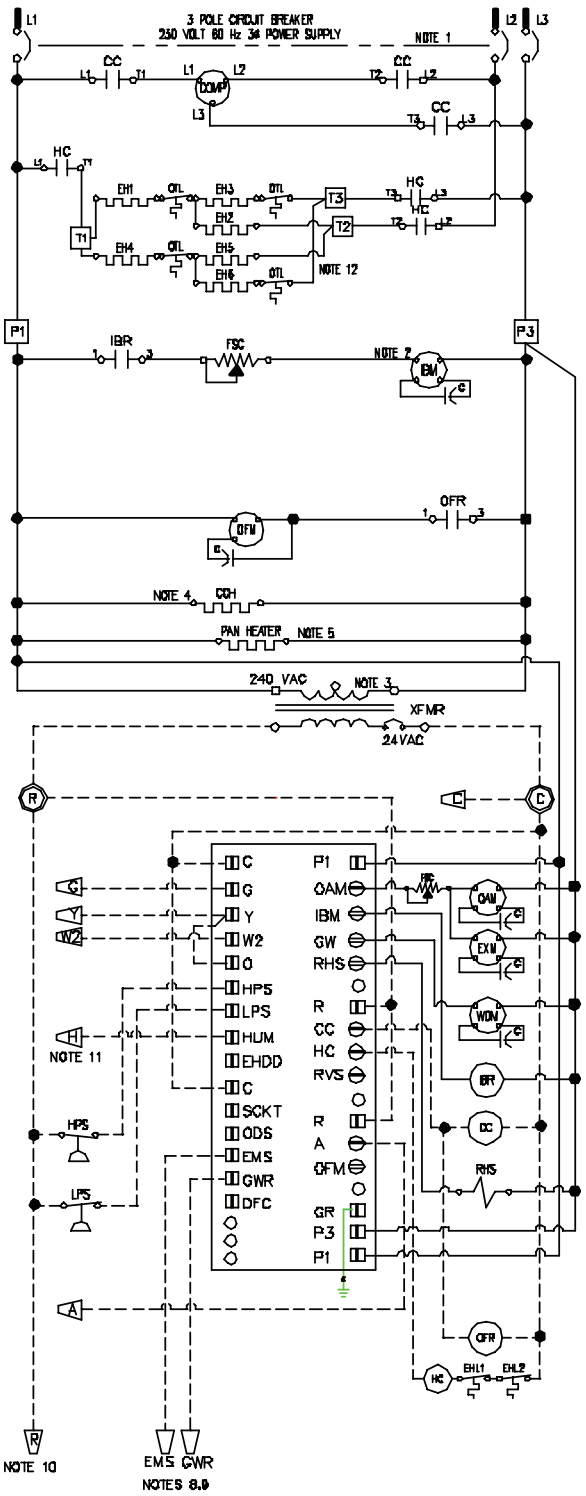

VOLTAGE LEGEND

- LINE VOLTAGE FACTORY
- LINE VOLTAGE FIELD
- LOW VOLTAGE FACTORY
- LOW VOLTAGE FIELD
- ALT. VOLTAGE (FIELD SPEC.)

COLOR CODE

BK	BLACK	O	ORANGE
BL	BLUE	R	RED
BR	BROWN	Y	YELLOW
G	GREEN	WHT	WHITE
GY	GRAY		

BK/RED BLACK WITH RED STRIPE

ELECTRICAL LEGEND:

C	CAPACITOR
CC	COMPRESSOR CONTACTOR
CCH	CRANKCASE HEATER
COMP	COMPRESSOR
DFC	DEFROST CONTROLLER
EH	ELECTRIC STRIP HEATER
EHL	ELECTRIC HEAT LIMIT
EXN	EXHAUST MOTOR
FSC	FAN SPEED CONTROL
HC	HEAT CONTACTOR
HPS	HIGH PRESSURE SWITCH
IBM	INDOOR BLOWER MOTOR
IBR	INDOOR BLOWER RELAY
LPS	LOW PRESSURE SWITCH
OAM	OUTDOOR AIR MOTOR
OFM	OUTDOOR FAN MOTOR
OFR	OUTDOOR FAN RELAY
OTL	ONE TIME LIMIT
PLC	PROGRAMMABLE LOGIC CONTROLLER
RHS	REHEAT SOLENOID
RVS	REVERSING VALVE SOLENOID
WDM	WHEELDRIVE MOTOR
XFMR	TRANSFORMER

⊖ OO = PLC OUTPUT TERMINAL

◫ IO = PLC INPUT TERMINAL

GENERAL NOTES:

1. 240 VOLT 60Hz 3ø POWER SUPPLY. SEE DATA PLATE FOR AMPACITY AND FUSE SIZE. OPTIONAL CKT BKR SHOWN.
2. SPEED TAP – SEE MOTOR NAMEPLATE FOR WIRE COLORS.
3. MULTI-TAP TRANSFORMER HAS CIRCUIT BREAKER ON SECONDARY SIDE. RESET AND CHECK CONTROL CIRCUIT IF OPEN.
4. CRANKCASE HEATER NOT USED ON ALL MODELS.
5. OPTIONAL PAN HEATER, 50 WATTS 240 VOLT.
6. COMPRESSOR IS PROTECTED UNDER SINGLE PHASE FAILURE CONDITIONS.
7. CHECK LABEL FOR L1, L2 AND L3 ON LEAD END OF THE COMPRESSOR AT THE CONTACTOR. DO NOT REFERENCE MARKINGS ON THE COMPRESSOR TERMINAL COVER FOR BASIS OF WIRE TERMINATION DUE TO CORRECT PHASING REQUIREMENTS FOR 3ø "SCROLL" COMPRESSOR MOTORS. IMPORTANT NOTE TO INSTALLER: ALL 3ø COMPONENTS WERE PROPERLY PHASED AT FACTORY RUN-TEST. IF ONE 3ø COMPONENT ROTATES BACKWARDS, ALL SHOULD ROTATE BACKWARDS. INTERCHANGE 2 LEADS OF FIELD POWER SUPPLY TO PROPERLY PHASE ENTIRE UNIT. DO NOT INTERCHANGE LEADS ON INDIVIDUAL COMPONENTS.
8. THE UNIT CONTROL SYSTEM IS FACTORY WIRED TO OPERATE UPON AN INPUT SIGNAL FROM ANY APPROPRIATE 24 VAC CONTROL THERMOSTAT OR DDC CONTROL SYSTEM. IF UNIT SHUTDOWN IS DESIRED DURING UNOCCUPIED PERIODS OF THE TEMPERATURE CONTROLLED SPACE IT MAY BE ACCOMPLISHED BY THE FOLLOWING: THE CONTROLS CONTRACTOR MUST PROVIDE A SET OF CONTACTS (24 VAC PILOT DUTY) BETWEEN WIRES MARKED EMS AND R. WHEN THE FIELD SUPPLIED CONTACTS BETWEEN EMS AND R ARE CLOSED THE SYSTEM WILL SHUT DOWN.
9. THE UNIT CONTROL SYSTEM IS FACTORY WIRED TO ENERGIZE THE VENTILATION PACKAGE ANYTIME THE INDOOR FAN/BLOWER IS ENERGIZED. IF ADDITIONAL CONTROL OF THE VENTILATION PACKAGE IS DESIRED, IT MAY BE ACCOMPLISHED BY THE FOLLOWING: THE CONTROLS CONTRACTOR MUST SEPARATE THE FACTORY INSTALLED WIRENUT BETWEEN WIRES MARKED GWR & R THEN PROVIDE A SET OF CONTACTS (24 VAC PILOT DUTY) BETWEEN WIRES GWR & R. WHEN THE FIELD SUPPLIED CONTACTS BETWEEN GWR & R ARE CLOSED THE VENTILATION PACKAGE WILL OPERATE WHEN THE INDOOR FAN/BLOWER IS ENERGIZED.
10. WIRES ARE MARKED FOR PROPER THERMOSTAT CONNECTIONS.
    R = 24VAC
    Y = COMPRESSOR
    G = BLOWER
    O = REVERSING VALVE
    C = 24VAC COMMON
    A = ALARM
    GWR = GREEN WHEEL RELAY
    EMS = ENERGY MANAGEMENT SYSTEM
    HUM = HUMIDISTAT
    W2 = ELECTRIC HEAT
11. CONNECT TO THE YELLOW LEAD ON H600A (REHEAT SIGNAL). LOCATE INSIDE LOW VOLTAGE SHIELD.
12. USE #10 AWG WIRE FOR 10 KW ELECTRIC HEATERS.

Due the wide variety of options, the control center in your unit may have different components from what is shown.

Figure 13 Humidity Controller Wiring Detail

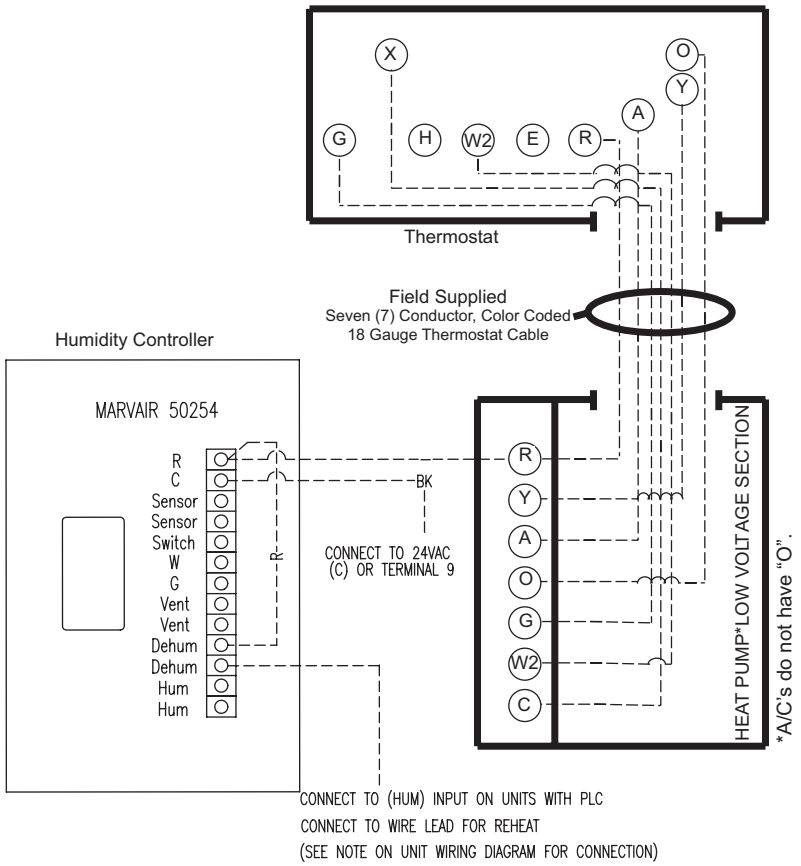

3. For Scholar QV™ heat pump or air conditioner that interfaces with a building automation system (BAS) or energy management system (EMS), detailed instructions for the specific system being installed will be supplied separately by the manufacturer of the BAS/EMS system.

   The control of the GreenWheel® ERV or Ventilation relay (VR) and the energy management relay (EMS) are 24 volt inputs to the PLC. If 120 V. of 240 inputs are required, additional relays must be installed in the factory or in the field.

   The unit control system is factory wired to operate upon an input signal from any appropriate 24 VAC control thermostat or DDC control system. If unit shutdown is desired during unoccupied periods of the temperature controlled space it may be accomplished by the following: The Controls Contractor must provide a set of contacts (24 VAC pilot duty) between terminals E1 and E2. When the field supplied contacts between E1 and E2 are closed the system will shut down.

   The unit control system is factory wired to energize the ventilation package anytime the Indoor Fan/Blower is energized. If additional control of the ventilation package is desired, it may be accomplished by the following: The Controls Contractor must remove the factory installed jumper between terminals V1 and V2 then provide a set of contacts (24 VAC pilot duty) between terminals V1 and V2. When the field supplied contacts between V1 and V2 are closed the ventilation package will operate when the Indoor Fan/Blower is energized.

4. For models with an internal thermostat, no internal control wiring is required. The thermostat is preprogrammed at the factory to maintain a heating mode temperature of 64°F, and a cooling mode temperature of 82°F. To change these settings refer to the directions in installation instructions for the thermostat.

5. For units with the reheat dehumidification option, the humidity controller is remotely mounted on the wall in accordance with the same instructions for the mounting of the wall thermostat installation given in Section 1.12 of this manual. Low voltage leads from the humidity controller are brought into the terminal strip area as shown by routing through the raceway noted in Figure 8, where the "R" lead is connected to the R terminal on the terminal strip. The other lead is connected to HUM on PLC as noted on the wiring schematic of the heat pump. See Figure 13.

C. Condensate drain line hook-up will be from the vertically downward 3/4" female PVC slip fit port located just behind the breaker disconnect box in the lower right corner of the Scholar QV™ heat pump or air conditioner. Reference Figure 8 for the location of the fitting. Because the condensate drain trap is factory installed, run the drain line directly to the roughed-in stub out. All materials for the condensate drain hook-up are field supplied. The secondary drain line is located in the outdoor air box of the Scholar QV unit. This drain line must be routed to the outside between the blades in the outdoor louver. In the event that the primary drain does not function, the condensate will flow out of the unit and should be visible on the exterior of the school.

D. 1. **Wet heat hook-ups** are done by connecting the rough-in piping to the factory supplied coils inside the plenum.

   a. For **hot water heating**, the plenum is equipped with a coil and a freeze protection thermostat embedded in the coil. An optional diverter valve may also be factory installed. The front and top panels of the plenums are removable, to access the coil and make piping and wiring connections. Consult hot water plenum installation instructions for installation details or see Appendix C in back of this manual.

1.12 VENTILATION SYSTEM CALIBRATION

Prior to start-up of the Scholar QV™ heat pump or air conditioner, the ventilation system requires calibration to ensure the appropriate amount of fresh air is delivered to the classroom. Refer to the appropriate following ventilation system and use the instructions to calibrate the system for correct air delivery.

A. Manual Fresh Air System. This ventilation module is standard with the Scholar QV™ heat pump and air conditioner. Fresh air ventilation by means of a damper with pressure relief provides up to 450 cfm of outside air. The damper can be manually adjusted at installation to provide the required ventilation airflow.

The fresh air door should be set in accordance with the amount of fresh air flow required, up to a maximum of 450 CFM. Figure 14 illustrates the fresh air door settings and air flow rates.

Follow the directions in Figure 14 to ensure proper air flow rate settings. After calibrating the ventilation system, replace the lower front cabinet panel.

B. Motorized and PowerVent Fresh Air Systems. This motorized ventilation module is equipped with a motorized damper and pressure relief, and provides up to 450 cfm of outside air. The damper position can be adjusted at installation to provide the required ventilation air flow. The motorized damper operates by an external relay with a choice of 24, 120, or 240V coils, to regulate fresh air ventilation in response to a control located remotely from the heat pump or air conditioner.

This PowerVent ventilation module features a motorized damper, as above, plus powered exhaust ventilation to provide up to 450 cfm of outside air. The damper position can be adjusted at installation to provide the required ventilation air flow. An exhaust air fan speed controller is available as an option. This speed controller regulates the exhaust air motor and allows separate control of the exhaust air. Independent control allows positive pressurization of the classroom, i.e., more outside air can be brought into the classroom than what is exhausted.

The fresh air door is opened and closed by the motorized drive. Calibration, as shown in Figure 15, will ensure the required amount of air, up to a maximum of 450 CFM, is delivered to the classroom.

Follow the directions in Figure 15 to ensure the proper air flow rate setting. After calibrating the ventilation system, replace the lower front cabinet panel.

Figure 14. Manual Fresh Air System Calibration Procedure

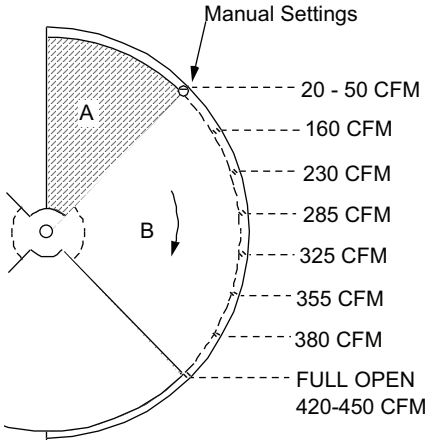

Inside the lower section, locate the circular calibration plates as noted in the drawing ("A" is fixed, "B" is movable). Remove the screw shown by the arrow from "Manual Settings."

Rotate plate B in a clockwise direction until the hole from which the screw was removed aligns with the hole adjacent to the desired air flow rate, in CFM.

Reinsert the screw into the hole in plate B and firmly drive the screw through the appropriate air flow rate hole, so plate B is securely fastened at the desired opening.

Note: Once calibrated, the manual fresh air system door remains at the set opening at all times.

Figure 15. Motorized and PowerVent System Calibration Procedure

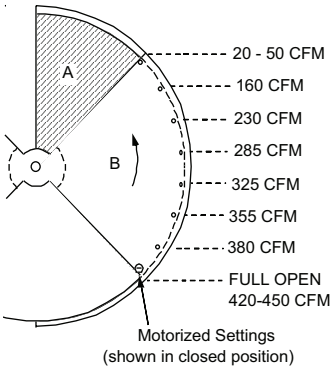

Note: Motor drives plate B open to setting when control relay (VMR) is energized. Motor drives plate B to the closed position when control relay (VMR) is deenergized.

Operation is the same for the "Motorized" and "PowerVent" systems.

Inside the lower section, locate the circular calibration plates as noted above in the drawing ("A" is fixed, "B" is movable). Remove the screw shown by the arrow from "motorized settings."

Reinsert the screw into the hole in plate B adjacent to the desired air flow rate, in CFM, and firmly drive the screw in until it bottoms out at the screw head.

C. GreenWheel® ERV. Using best industry standards and practices, measure the fresh air that is being brought into the classroom. For units with one speed controller (std.), adjust the speed of the intake and exhaust blowers by inserting a slotted screw driver into the opening on the controller. The speed controller is located in the control box. Measure the intake air again and adjust the speed of the blowers. Repeat as necessary to meet the fresh air requirements.

For units with the optional variable fan speed controller for the exhaust blower on the GreenWheel® ERV, first measure the air being introduced into the classroom using best industry standards and practices. Adjust the speed of the intake air blower until the required outside air is being brought into the classroom.

Now measure the exhaust air from the classroom. Adjust the speed of the exhaust air blower until the required air is being exhausted from the classroom. The exhaust air controller is in the control box. It is usual practice to pressurize the classroom by exhausting slightly less air than is being brought into the classroom.

1.13 CONTROL ADJUSTMENTS

A. **Scholar QV™ Heat Pump PLC (Programmable Logic Controller) Microprocessor**. Essential to the operation of the Scholar QV heat pump is a factory installed PLC microprocessor. Since July of 2001, all Scholar QV heat pumps have incorporated the PLC. The PLC controller improves reliability due to a reduction of components and simplification of the control panel wiring. The PLC is able to:

- Provide various control functions
- Show operational status through LED's
- Assist in troubleshooting
- Perform extensive self diagnosis and indicate a fault
- Store statistical operational data
- Be programmed remotely or with a removable program storage device

The PLC is factory wired and tested and typically no adjustments or changes are required to the PLC when the Scholar QV™ heat pump is installed.

Location

The PLC is located in the unit control center. The control center is accessed by removing the middle cabinet panel. (The panel below the return air grille.) After removing the middle cabinet panel, remove the cover to the control center.

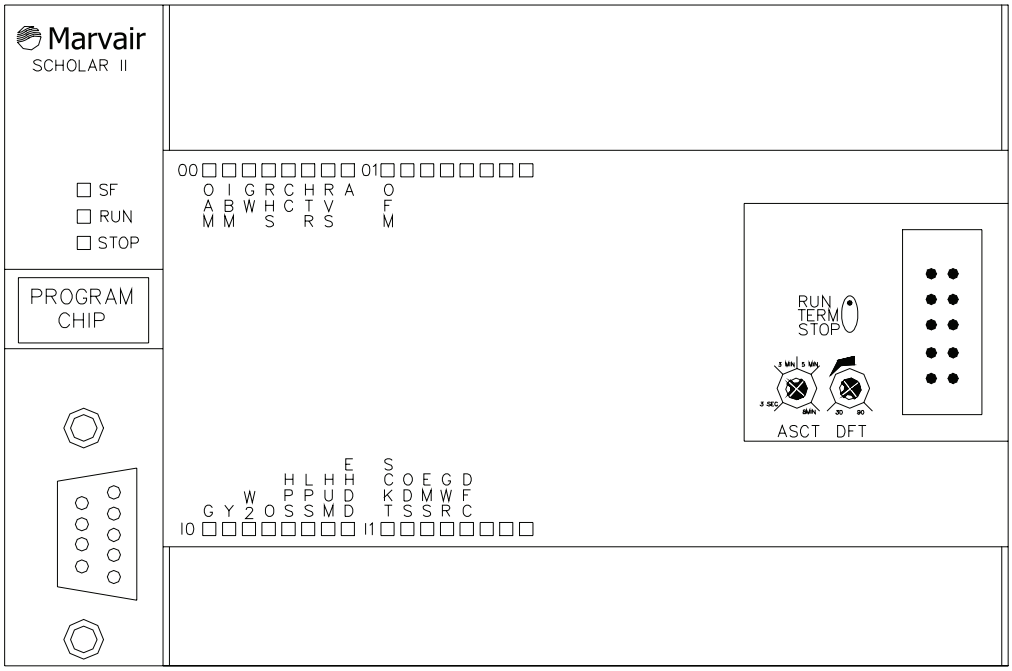

On the right side of the PLC there is a small door. Behind the door is a three position micro switch and two control adjustments- an anti short cycle timer and a defrost timer. Each control can be adjusted by turning the knob with a small flat head screwdriver. The indicator on the knob is the gap between the two protrusions with the hollow centers on the knob. (See drawing below). For both control timers, turning the knob clockwise increases the time period.

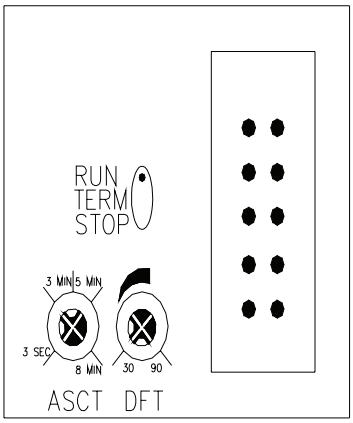

The micro switch has three positions – **RUN, TERM & STOP**. The switch should be in the **RUN** position during normal operation. **Term** is for operation from a remote terminal. **Stop** is no output/non-operational.

The **Anti-short Cycle Timer (ASCT)** is located to the far left of the switch. The anti-short cycle timer prevents the compressor from destructive short cycling by allowing the compressor to restart only after a selected time interval has passed from compressor shutdown. The timer begins when the compressor turns off. The time interval is from 3 seconds to eight minutes in one minute increments. The three-second setting is used only for factory testing and should NEVER be used when installed in a classroom. Select the desired time interval by rotating the knob to the desired setting. The Marvair® factory set point is 3 minutes.

The **Defrost Timer (DFT) (heat pump function only)** is located next to the three position micro switch. The defrost control is based upon both time and temperature. The DFT initiates a defrost cycle whenever the outdoor coil temperature is 28°F or below and the selected time interval from the previous defrost cycle has been exceeded. Select the desired time interval by turning the DFT knob. When turned completely to the left (counterclockwise), the time interval between defrost cycles is 30 minutes. When turned completely to the right (clockwise), the time interval is 90 minutes. The knob allows setting the defrost time anywhere between 30 and 90 minutes, i.e., midway between the 30 and 90 minutes is 60 minutes. The Marvair® factory set point is 30 minutes.

PLC Inputs & Outputs

The PLC has inputs located along the bottom of the controller and outputs along the top of the controller. An input is a signal to the PLC from either the thermostat, sensors in the Scholar QV™ heat pump, or a customer supplied input, e.g., DDC. An output is a signal from the PLC to the heat pump, air conditioner or to the thermostat.

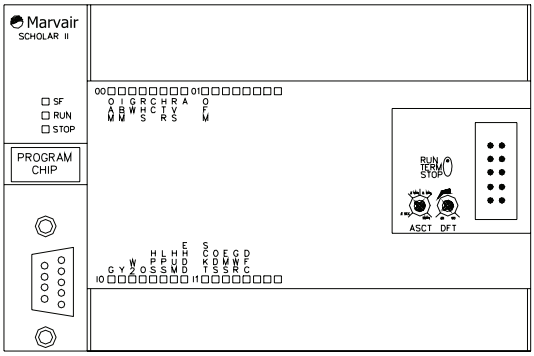

PLC Inputs

The PLC inputs are powered only by 24 VAC. The thermostat inputs are:

- **G** - Blower signal from thermostat
- **Y** - Compressor
- **W2** - Second stage heat (heat pump function only)
- **O** - Reversing valve (energized for cooling) (heat pump function only)

The PLC has indicator LED's that show the status of all thermostat inputs and sensors. For example, if the "G" LED is on, this means that voltage is present from the "G" terminal on the thermostat.

Scholar QV™ heat pump sensor or control inputs:

- **HPS** – High Refrigerant Pressure Switch. The HPS is ON during normal operation. No light indicates an open switch. See lockout indicator "A" under Outputs.
- **LPS** – Low Refrigerant Pressure Switch. The LPS is ON during normal operation. No light indicates an open switch. See lockout indicator "A" under Outputs
- **HUM** – Humidity Controller. Used when an external humidity controller operates the Scholar to control the humidity in the classroom.
- **EHDD** – Electric Heat During Defrost. Allows the user to select whether electric heat operates when the heat pump enters into the defrost mode. On the 2, 2 ½, 3 and 3 ½ ton heat pumps, the units are wired at the factory to prevent the electric heaters from operating during the defrost mode. For operation during defrost, a wire is moved from one terminal to another in the control box. On 4 & 5 ton units, a toggle switch in the control box controls this function. In the "EHDD" position, electric heat will operate in the defrost mode. In the "NORM" position, electric heat does **not** operate in the defrost mode. NOTE: for operation of the electric heat during defrost, the electric heat control must be configured to allow simultaneous operation of the electric heat and the compressor. (heat pump only)
- **SCKT** – "S" Circuit. Signal that indicates the electric heat and the compressor can never operate simultaneously. This function is controlled by the electric heat control toggle switch in the control center. The LED should be ON if "Y" is ON, the electric heat is on and the toggle switch is in the S circuit position. (heat pump only)
- **ODS** – Outdoor Thermostat. Determines at what outdoor temperature (factory set at 40°F), the supplemental heat turns on. The LED should be ON if the outdoor temperature is below the ODS set point. (heat pump only)
- **EMS** – Energy Management System. A shutdown input from an external source.
- **GWR** – GreenWheel® ERV Relay. When this LED is lit, the GreenWheel ERV is operating.
- **DFC** – Defrost Control Thermostat. Indicates whether the defrost thermostat is closed. The defrost cycle is based upon both time (see defrost timer) and outdoor coil temperature. (heat pump only)

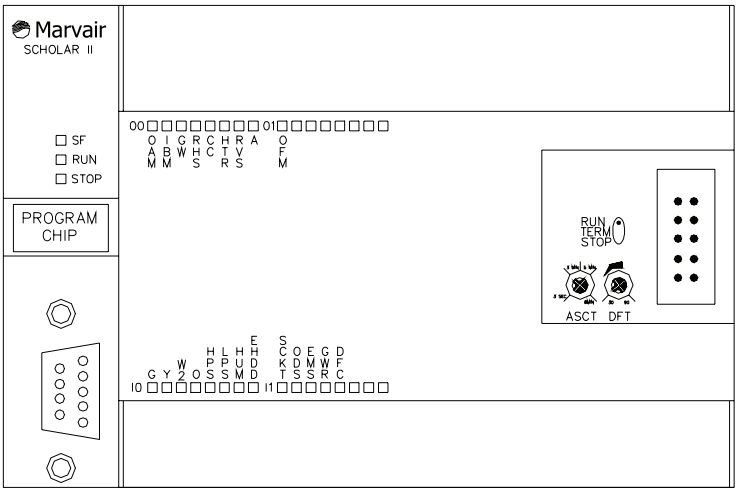

PLC Outputs

An output is a signal from the PLC to the Scholar QV™ heat pump or thermostat. The first four outputs, from left to right, are connected to a 230 VAC supply and thus provide 230 VAC when energized. These outputs are:

- **OAM** - Outdoor Air Motor (Fresh air motor for the GreenWheel® ERV)
- **IBM** – Indoor Blower Motor Relay Note: On early models, this was IFM.
- **GW** - GreenWheel® ERV Drive Motor
- **RHS** - Reheat Solenoid

The next five outputs are 24 VAC. These outputs are:

- **CC** - Compressor Contactor
- **HTR** - Heat Contactor
- **RVS** - Reversing Valve (heat pump only)
- **A** - Lock Out Indicator. A blinking LED indicates that a pressure switch has opened. A flash rate of once per second indicates a low pressure switch lockout. A flash rate of twice per second indicates a high pressure lockout.
- **OFM** - Outdoor Fan Motor Relay

On the left side beneath the Marvair® logo are three LED's that indicate the operational status of the PLC.

- **SF** – System fault indicates an internal fault in the PLC. The fault can be found using the Microwin Programming System and an external PCI cable.

- **Run** – Normal operation. The PLC is on/operational. When the micro switch is in the RUN position, this LED should be lit.
- **Stop** – The PLC is off/non operational. When the micro switch is in the STOP position, this LED should be lit.

Operation Guide

Cooling Mode

During normal operation of the system, the thermostat calls for cooling by turning on the G, Y and O inputs to the system. This request will be indicated on the G, Y and O indicators at the bottom of the unit. If the compressor has been off for a least the amount of time interval set on the ASCT, the Compressor Contactor (CC), Indoor Blower (**IBM**), Reversing Valve (RVS) and the Outdoor Fan Motor (OFM) LED's should be on. This indicates that the controller is sending an output to turn those devices on.

Heating Mode

When the thermostat calls for first stage heating, it turns on the G and Y inputs. The indicators will come on to indicate the thermostat is calling for heat. If the compressor has been powered off for at least the time set on the ASCT, the Compressor Contactor (CC), Indoor Blower Motor (IBM) and Outdoor Fan Motor (OFM) LED's will be on. The LED's indicate that the PLC is sending an output to the devices' controls.

If the thermostat calls for second stage heating (heat pump only), the W2 indicator will be lit. If the W2 LED is on, indicating that the thermostat is calling for second stage heat and the ODS indicator is not and the outside temperature is not below the ODS set point, the second stage heat (HTR) will not come on.

If the W2 indicator is on and the ODS indicator is on then, in addition to the CC, IBM and OFM indicators, the HTR indicator will be on indicating the call for second stage heat.

If the SCKT LED is on indicating that the S Circuit function is selected, the CC and OFM indicators will be off and the HTR indicator will be on. Refer to table below.

G	Y	W2	ODS	SCKT	IBM	CC	OFM	HTR
ON	OFF	OFF	OFF	OFF	ON	OFF	OFF	OFF
ON	ON	OFF	OFF	OFF	ON	ON	ON	OFF
ON	ON	ON	OFF	OFF	ON	ON	ON	OFF
ON	ON	ON	ON	OFF	ON	ON	ON	ON
ON	ON	ON	ON	ON	ON	OFF	OFF	ON

Defrost Mode (heat pump only)

When the system has been operating in the heat pump mode for a period of time (set by the Defrost Timer), the system will examine the Defrost Control thermostat Input (DFC). If this input is on (the thermostat is closed), indicated by the LED being on, the system will go into Defrost mode. At this point the Outdoor Fan Motor relay (OFM) is de-energized and the reversing valve is energized. In this mode heat is being applied to the outdoor coil to remove any possible buildup of ice on the coil. The Defrost Control Switch (DFC) comes on at roughly 28°F and goes off at approximately 56°F. During the Defrost Cycle, the unit will continuously examine the DFC input and when it switches off OR the system has been in defrost for 10 minutes, the system will revert back to normal heating mode. By having a maximum time for the Defrost Cycle to operate, the system will not go into Defrost and remain in Defrost mode if a Defrost Switch malfunctions. If the Electric Heat During Defrost (EHDD) function has been selected, the Heat Contactor (HTR) will come on to supply supplemental heat during the Defrost Cycle.

Low Pressure Lockout

The Low Pressure Switch is designed to guard against the operation of the system in the event of a loss of refrigerant. If the Low Pressure Switch stays on for more than eight minutes, the system will turn off and a Low Pressure Lockout fault will be indicated by a slow flashing on the “A” LED. The interval for the flash is once per second.

In cold weather the pressure in the refrigerant system is low prior to operation. When the Scholar QV™ unit starts in the heat pump mode during cold weather, low pressure could cause the system to lock out. To guard against nuisance lockouts, the Scholar QV unit will not shut off if the Low Pressure Switch (LPS) comes on during the first eight minutes of operation and the switch has not cycled more than three times in an hour. In other words, the compressor will start and operate for eight minutes even with the LPS switch off three times before causing a lockout on low pressure.

High Pressure Switch

The system has a High Pressure Switch (HPS) that indicates a high system pressure. When this occurs, the system will run for five seconds then set a High Pressure Lockout. This lockout condition shuts the system off and flashes the “A” indicator quickly at a rate of twice per second.

Troubleshooting Chart

Troubleshooting

The PLC is a microprocessor-based system that has the ability to provide a great amount of information to aid in troubleshooting a malfunctioning system. In addition to field malfunctions such as a bad Compressor Contactor, the system performs a diagnostics on itself about 100 times per second. If any internal faults are found the

system will turn itself off and indicate a failure on the System Fault (SF) indicator. The fault can be read by using the Microwin Programming System.

Most likely the faults will occur external to the PLC however. These faults should be easily diagnosed by using the indicators on the front panel.

Normal Operation

The High Pressure Switch (HPS) and Low Pressure Switch (LPS) should be on all the time. An exception will be during a low temperature start-up during which the LPS should come on within a few moments of start-up.

The chart below shows the standard inputs and what functions should be on as a result.

	OAM	IBM	GW	RHS	CC	HTR	RVS	A	OFM
G		X							
Y					X	X If SCKT is on			X
W2		X				X			
O							X		
HPS								X If HPS is off	
LPS								X If LPS is off	
HUM		X		X	X		X		X
EHDD						X If system is in Defrost Mode			
SCKT						X If Y is on due to a call for heat			
ODS						X If calling for heat			
EMS									
GWR	X If system is calling for any function and an external control is not utilized.		X If system is calling for any function and an external control is not utilized.						
DFC		X			X		X		

X – Indicates that this function should be on.

2. **Outdoor Thermostat (heat pump only).** Factory set at 40°F, this thermostat determines the outdoor temperature at which the supplemental electric heat or wet heat turns on. This may be field adjusted to the desired temperature setting by rotating the knob on the control panel. (See Figures 9 and 10.)

3. **Electric Heat Control (heat pump only)**. allows the user to select whether the electric heat operates simultaneously with the compressor. On the 2, 2 ½, 3 and 3 ½ ton heat pumps, the units are wired at the factory for simultaneous operation. For non-simultaneous operation, a wire is moved from one terminal to another in the control box. On 4 & 5 ton units, a toggle switch in the control box controls this function. In the "NORM" position, electric heat can operate simultaneously with the compressor. In the "S circuit" position, electric heat does **not** operate any time the compressor is operating. (See Figures 9 and 10.)

4. **Electric Heat During Defrost (heat pump only).** Allows the user to select whether electric heat operates when the heat pump enters into the defrost mode. On the 2, 2 ½, 3 and 3 ½ ton heat pumps, the units are wired at the factory to prevent the electric heaters from operating during the defrost mode. For operation during defrost, a wire is moved from one terminal to another in the control box. On 4 & 5 ton units, a toggle switch in the control box controls this function. In the "EHDD" position, electric heat will operate in the defrost mode. In the "NORM" position, electric heat does **not** operate in the defrost mode. NOTE: for operation of the electric heat during defrost, the electric heat control must be configured to allow simultaneous operation of the electric heat and the compressor. (See Figures 9 and 10.)

5. **Indoor Blower Speed Control**. The indoor blower speed control is located within the middle cabinet panel of Scholar QV™ heat pump and air conditioner. Factory setting for the indoor blower speed is full speed. If a lower speed setting is required, the blower motor speed control may be adjusted with a slotted screwdriver rotating the speed control as shown in Figure 18. Reference unit label for <u>minimum required</u> air flow settings for specific unit model.

Figure 18. Indoor Blower Speed Control Adjustment Instructions

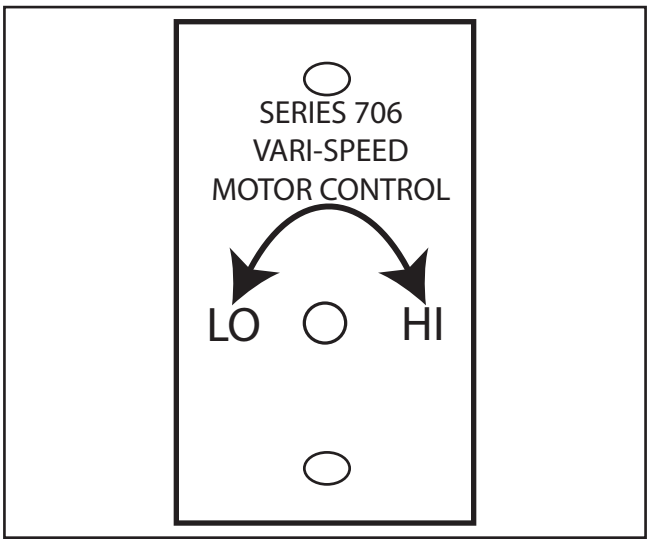

1.13B ELECTRONIC CONTROL BOARD MODE OF OPERATION (Air Conditioners Only)

Normal

24 VAC power must be continuously applied to “R” and “C”. Upon a call for cooling “Y” and with the high pressure switch (HPS) closed, the compressor will be energized. (Note: See the delay on make feature.) The compressor will remain energized during the 3 minute timed low pressure by-pass cycle. If the low pressure switch (LPS) is open after the 3 minute by-pass cycle, the compressor will de-energize.

Lock-out

If either of the fault conditions (LPS or HPS) occurs twice during the same call for cooling, the control board will enter into and indicate the lockout mode. In the lockout mode, the compressor is turned off. If there is a call for indoor air flow “G”, the blower remains energized, the alarm output is energized and the status led will blink to indicate which fault has occurred. When the lockout condition is cleared, the unit will reset if the demand for the thermostat is removed or when the power is reset. With the control board, the user can now have either normally closed or normally open contacts by moving a wire on the control board. The Scholar QV air conditioners are factory wired to be normally open.

Delay on Break

If the compressor is de-energized due to a loss of a cooling “Y” call or the first fault, the unit re-start will be delayed 3 minutes from the time the contactor is de-energized. (Note: There is no delay on break if the lockout condition is reset.)

Delay on Make

On initial power up only, the unit will wait 0.03 to 10 minutes from the cooling “Y” call before allowing the contactor to energize. The delay can be adjusted by the DOM wheel on the board. Factory recommended wait is 3 minutes.

Low Pressure By-Pass Time

When starting, the low pressure switch (LPS) fault condition will be by-passed for 3 minutes before the contactor is de-energized.

Post Purge

Upon a call for indoor airflow “G” the blower will energize immediately. When in the cooling mode, the blower will remain energized for 10 to 90 seconds (adjustable) after the compressor has been de-energized. The time period can be changed by fan purge wheel on the board. Factory setting is 90 seconds.

LED Indicator Lights

COLOR	TYPE	STATUS	DESCRIPTION
Green	Power	Constant On	24 VAC power has been applied
Red	Status	Constant On	Normal operation
Red	Status	1 Blink	High pressure switch has opened twice
Red	Status	2 Blinks	Low pressure switch has opened twice

Modulating Head Pressure Controller

The Scholar QV air conditioners use a modulating head pressure controller to vary the speed of the condenser fan motor based upon the temperature of the condenser coil. A

temperature sensor mounted on the condenser coil senses the temperature of the coil. The condenser motor can vary from 30% of full speed with a coil temperature of approximately 70°F to full speed when the coil temperature approaches 90°F. Varying the speed of the condenser motor reduces the air flow and thus reduces sound levels both inside and outside the classroom.

High Pressure Switch

The high pressure switch is mounted on the compressor liquid line. It is electrically connected to a lockout relay which shuts down the system if the refrigerant pressure rises to 625 PSIG. This protects the unit if airflow through the condenser is blocked or if the outdoor fan motor fails.

Although the contacts of the high pressure switch close when the refrigerant pressure falls to approximately 450 PSIG, the system must be manually reset once the lockout relay is activated. A manual reset is necessary to prevent harmful short-cycling. To reset switch, turn primary power off, then back on or turn thermostat system switch off, then back on.

Low Pressure Switch

The low pressure switch is mounted on the compressor suction line. It is designed to open if the refrigerant pressure drops to 40 PSIG; it resets when the pressure rises to 60 PSIG. The switch protects the unit if airflow through the indoor blower is impeded, if the blower motor fails, or if there is a loss of refrigerant.

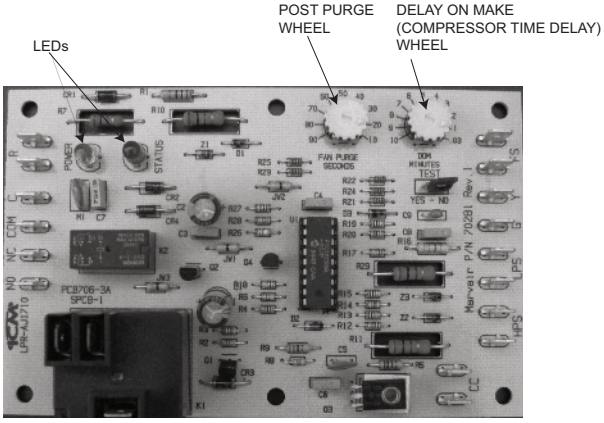

1.14 REMOTE THERMOSTAT INSTALLATION

A. Locate the thermostat about five feet above the floor on an inside wall. Avoid the following:

Hot Spots	Cold Spots	Dead Spots
Concealed Pipes or Duct	Concealed Pipe or Ducts	Behind Doors
Registers	Stairwells - Drafts	Corners and Alcoves
TV Sets	Doors - Drafts	
Radio	Unheated Rooms on Other Side of Wall	
Lamps		
Direct Sunlight		

After choosing the wall upon which to mount the thermostat, see instructions in the thermostat box for mounting the thermostat on the wall.

B. The thermostat should be wired to the terminal strip in the Scholar QV™ heat pump or air conditioner in accordance with Figure 13, and in accordance with the thermostat instructions, National Electric Code, and with local electrical codes, where they prevail.

MARVAIR®/SIMPLE COMFORT THERMOSTAT CONNECTION DIAGRAM
for Marvair Heat Pumps and Air Conditioners (without hot gas reheat or electric reheat)

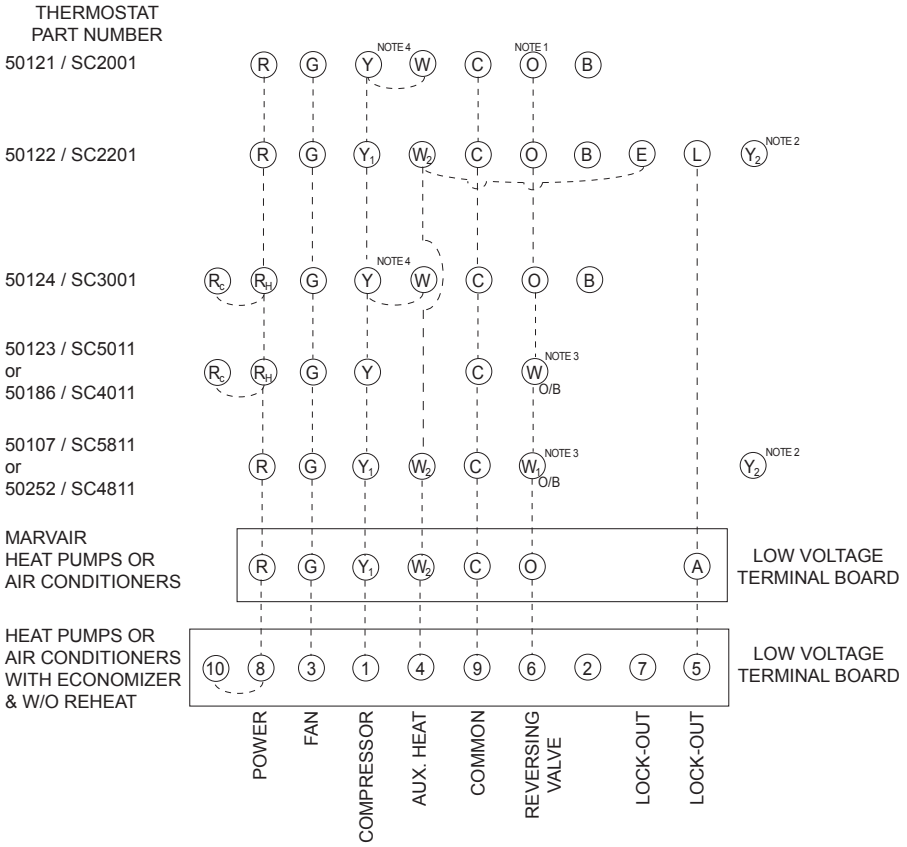

NOTES:
1. Reversing valve on heat pumps only.
2. For units with 2-stage compressors, connect lead from the compressor monitor and diagnostic module, e.g., Copeland's Comfort Alert, to Y_2
3. For air conditioners with strip heat, connect W/O/B to terminal W or 4.
4. Jumper for heat pump only, omit with air conditioners.

A. Terminals 5 & 7 are normally open dry contacts and close to indicate lockout.
B. Terminals 6 & 7 are normally closed dry contacts and open to indicate lockout.
C. If the thermostat has RC & RH terminals, install a jumper wire between RC & RH.
D. IMPORTANT. The instructions are generic wiring instructions and may not be applicable for air conditioners with various options. Always refer to the wiring diagram in the air conditioner for the proper method to wire your unit.

1.15 START-UP PROCEDURE

A. This start-up procedure applies to Scholar QV™ models equipped with a remote (wall mounted) thermostat and electric supplemental heat.

1. Turn the disconnect in the Scholar QV™ unit to "OFF" position and double check all electrical connections before applying power.

2. Set the remote thermostat system switch to "OFF" position. The blower switch should be in "AUTO" position.

3. Check the voltage supply to the disconnect. If voltage readings are appropriate, proceed with start-up. (See Figure 19 for acceptable voltage ranges.) If voltage readings are not appropriate, check the power leads at the disconnect and the main breaker in the mechanical room. Take appropriate corrective action to supply sufficient voltage to the Scholar QV™ disconnect.

Figure 19. Voltage Limitations

Electrical Rating Designations*	A	C	D
Nominal Voltage	208/230	208/230	460
Phase	1	3	3
Minimum Voltage	197	197	414
Maximum Voltage	253	253	506

* Letters refer to model number code designations.

Example: VACA 36 HP(A) — Voltage

4. Turn the Scholar QV™ disconnect to "ON" position.

IMPORTANT

ON UNITS WITH CRANKCASE HEATERS, POWER MUST BE APPLIED TO UNIT FOR 24 HOURS BEFORE STARTING THE COMPRESSOR.

5. Cooling

   a. At the remote thermostat, move the cooling set point several degrees above room temperature. Move the "heating" set point several degrees below room temperature.

   b. Put the thermostat system switch in "COOL" mode.

   c. Move the blower switch on the remote thermostat from "AUTO" to "ON" position. The indoor blower should come on, as evidenced by sound and air blowing out of the air supply grille.

   d. Move the blower switch on the remote thermostat from "ON" to "AUTO" and the indoor blower will stop 90 seconds later.

   e. Move the system switch on the remote thermostat from "OFF" to "COOL." Slowly lower the cooling set point to just below room temperature and bring on cooling. Check to see that when the heat pump comes on that the air coming out the discharge grille is cooling. Let unit run for five minutes in this mode. If heat pump continues to run and provide cooling, this verifies that the indoor blower, compressor and outdoor blower are all running.

   f. Now slowly raise the cooling set point up toward room temperature until the pump compressor and outdoor blower motor turn off. This will be audible. The indoor blower will continue to run and turn off after 90 seconds.

6a. **Heating (heat pump version only)**

   a. Put the thermostat system switch to "HEAT" mode. Wait five minutes after

testing on cooling, before testing in heating mode.

b. Slowly raise the heating set point above room temperature until the heat pump comes on. The indoor blowers will start and the heat pump will provide warm air from the air supply grille. Let run for five minutes.

c. Slowly lower the set point temperature until the heat pump compressor and outdoor blower turn off. The indoor blower will turn off 90 seconds later.

6b. **Heating (air conditioner version only)**

a. Set the heating set point below room temperature and put the thermostat system switch on “HT.”

b. Raise the set point slowly and the indoor blower and the electric supplemental heat will turn on at the same time.

c. Lowering the set point slowly should turn the electric heat off. The indoor blower will turn off 90 seconds later.

7. **Automatic Changeover**

For an automatic changeover remote thermostat, the proper functioning of the system can be checked for cooling and heating by using the same sequence as detailed above with the thermostat system switch put in “AUTO” position.

8. **Emergency Heat (heat pump version only)**

This setting on a remote thermostat is to provide electric heat in the event the compressor does not function, and heat is required. In emergency heat mode, the compressor is de-energized and electric heat supplies all heating, controlled by the thermostat.

To check this out, set the heating set point below room temperature and put the thermostat system switch on “EM. HT.”

Raise the set point slowly and the indoor blower and the electric supplemental heat will turn on at the same time.

Lowering the set point slowly should turn the electric heat off. The indoor blower will turn off 90 seconds later.

1.16 EXPLODED VIEWS AND PARTS LISTS

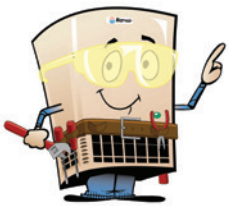

Current parts lists and exploded views of the unit can be found on our web site at www.marvair.com. Click on the Service and Parts in the menu on the left hand side of the Home page. From the drop down menu, select Exploded Views. Once here, you can select your air conditioner or heat pump. The units are grouped by model and by the refrigerant – R-22 or R-410A.

APPENDIX A - RATINGS AND DATA

1.01 RATINGS / DATA

Figure 1. Air Flow, CFM vs. ESP (Wet Coil)

AIR FLOW CFM						
BASIC MODEL	ESP (WET COIL)					
	0.10	0.15	0.20	0.30	0.40	0.50
24	920	890	860	800	——	——
30	1150	1100	1075	1000	——	——
36	1380	1340	1290	1200	——	——
40	1380	1340	1290	1200	——	——
49	1840	1780	1740	1600	1490	1400
60	2250	2190	2100	2000	1900	1790

CFM = Cubic Feet per Minute, Indoor Air Flow ESP = External Static Pressure in Inches of Water
Rated at 240 Volts

Figure 2. Air Filter Sizes (inches)

MODEL	RETURN AIR FILTER*	FRESH AIR FILTER	EXHAUST FILTER**
24/30/36/40	2 - 16” x 16” x 1”①	11” x 22” x 1”	12” x 20” x 1”
49/60	2 - 20” x 15” x 1”①	11” x 22” x 1”	12” x 20” x 1”

*Two (2) return air filters are required for each unit.
**With GreenWheel™ ventilation system.
① Optional 2” Filter

Figure 3. Shipping Weight (pounds)

BASIC MODEL	24	30	36	40	49	60
VOLTAGE - 230	450	540	550	565	935	960
VOLTAGE - 460	475	565	575	590	960	985

APPENDIX B - BASE STAND INSTALLATION

1.01 TOOLS/FIELD FURNISHED SUPPLIES

⚠ WARNING

TO AVOID PERSONAL INJURY, ADEQUATE PROTECTIVE CLOTHING MUST BE WORN AND PRECAUTIONS IN HANDLING AND INSTALLING THIS EQUIPMENT MUST BE PRACTICED AT ALL TIMES.

- Power Drill/Driver and Extension
- Bit for 5/16” Hex Head Bolts (or Adjustable Wrench)
- Appropriate Bits for Boring Anchor Holes and Fastening Anchor Bolts Through 1/2” Pass Through Holes in Base Stand (4 Locations)

1.02 INSPECTION/UNPACKING/HANDLING

Base stands are shipped to the job site on wooden skids and are enclosed in shrink wrap. Do not stack the base stands.

IMPORTANT

IMMEDIATELY UPON RECEIPT, INSPECT THIS EQUIPMENT TO DETERMINE VISIBLE AND CONCEALED DAMAGE. ALL DAMAGE MUST BE REPORTED TO THE FREIGHT CARRIER WITHIN 15 DAYS, ON THE FREIGHT CARRIER’S FORM.

The label on the base stand identifies the part number of the base stand. The part number on the base stand must be matched with the correct Scholar QV™ cabinet size prior to installing the base stand. The model numbers are located on the lower left side cabinet panel.

Base Stand Part #	Base Stand Height	Scholar QV™ Cabinet Models
S/02093	4”	Models 24/30/36/40
S/02791	4”	Models 49/60
S/02554	6”	Models 24/30/36/40
S/04244	6”	Models 49/60

Remove the shrink wrap from the base stand and dispose of the wooden skid. Retain the bag of 5/16” bolts and flat washers to fasten the cabinet to the base stand. **Do not install the Scholar QV heat pump or air conditioner to the base stand at this time.**

Place the base stand (as shown in Figure 1a or 1b) on the floor, measuring carefully to determine the exact location, based on where the heat pump or air conditioner is intended to be placed. It is important to be sure of base stand location when the unit is going to be located set off from the finished inside wall. The unit will be located directly on top of the base stand, and the base stand will be anchored to the floor.

Figure 1a. Top View of Base Stand Part Number S/02093 (For 24/30/36/40)

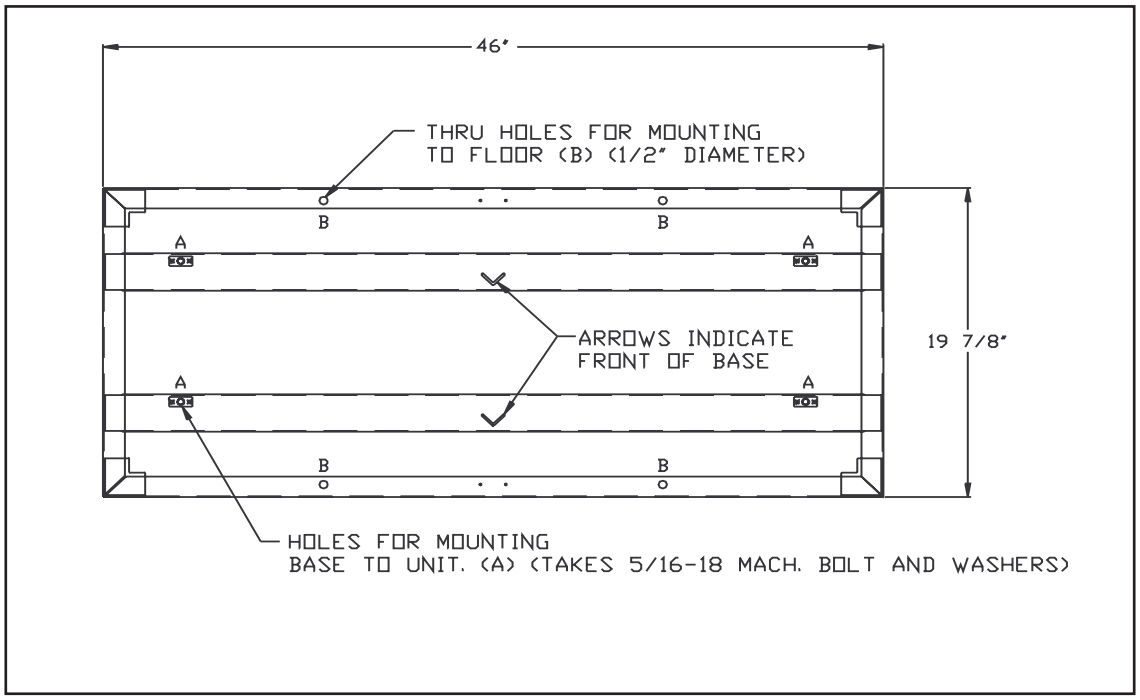

Figure 1b. Top View of Base Stand Part Number S/02791 (For 49/60)

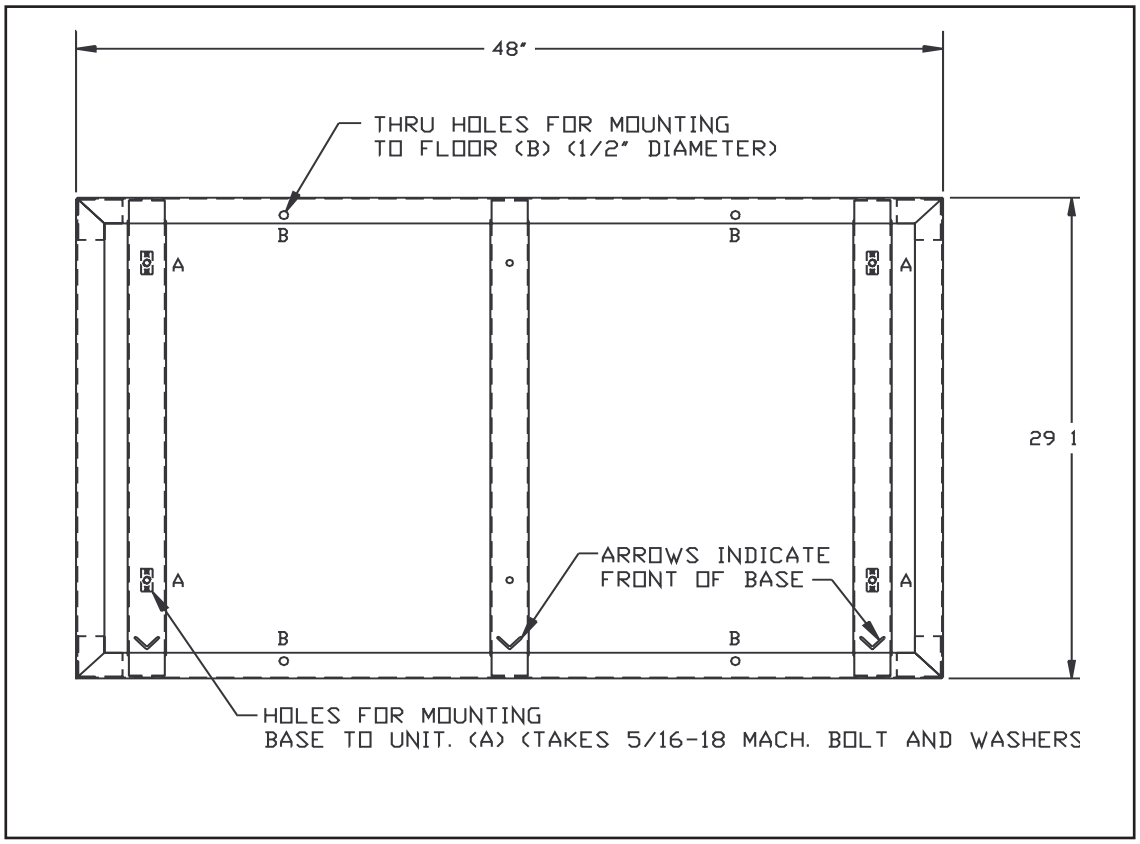

Also, recheck the locations of the electrical and condensate stub-outs to ensure they are located properly, relative to the cabinet knock-out openings as shown in the Installation and Start-Up Manual, Figures 3 and 4.

IMPORTANT

STUBOUTS SHOULD BE LOCATED (FROM THE FLOOR OR WALL) TO ALIGN WITH SELECTED CABINET KNOCK OUT ON THE CABINET, AS SHOWN IN FIGURES 3 & 4. THIS IS A REQUIREMENT IF A BASE STAND IS TO BE INSTALLED AND STUBOUTS ARE COMING THROUGH THE FLOOR

Lastly, remeasure to be sure that the wall opening for the Scholar QV™ heat pump and air conditioner air box is located properly, taking the height of the base stand into account, before proceeding to install the base stand.

1.03 INSTALLATION

After the base stand is located on the floor, mark the floor in the locations where 1/2" through holes go through the bottom flange of the base stand. Be sure the floor is a hard, smooth surface and the base stand is level. If the floor is carpeted, cut out a base stand "footprint," so the base stand rests on the non-carpeted floor.

Anchor the base stand to the floor with the four field supplied anchors.

Now remove the lower front cabinet panel from the heat pump or air conditioner, removing the shipping skid bolts, air box support and installing the plenum (as appropriate), following the instructions provided in Appendix C.

⚠ WARNING

WHEN MOVING/RAISING THE SCHOLAR QV™ CABINET, UTILIZE ADEQUATE RESOURCES TO HANDLE THE 300 TO 800 LB. CABINET. THIS IS TO AVOID PERSONAL INJURY OR DAMAGE TO THE EQUIPMENT/FACILITIES.

With appropriate resources to lift the Scholar QV™ unit, place it on the base stand while guiding the air box through the wall opening and maintaining clearance between the plenum (as appropriate) and the ceiling. The Scholar QV heat pump aligns and rests on the base stand as shown in Figures 2a/2b.

After the cabinet is resting on the base stand, align the four 3/8" through holes in the base with the receiving weld nut holes in the base stand. Thread the four 5/16" machine bolts with flat washers loosely into the base stand. Tighten bolts evenly to affix the cabinet firmly to base stand.

IMPORTANT

DO NOT OVERTIGHTEN MACHINE BOLTS OR CABINET BASE WILL BOW.

Figure 2a. Scholar QV™ Heat Pumps and Air Conditioners Placed on Base Stand.

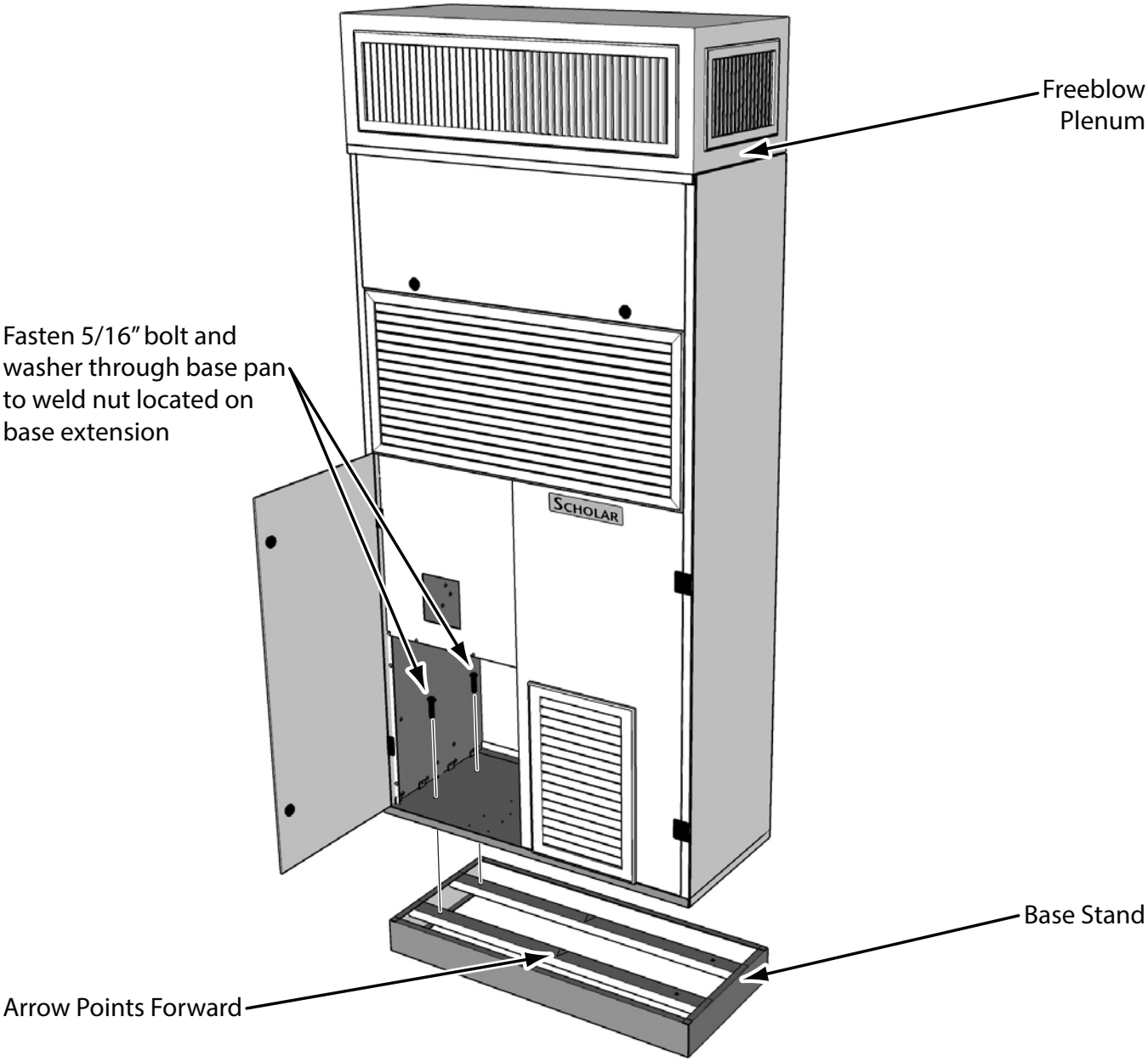

APPENDIX C - WET HEAT/PLENUM INSTALLATION

1.01 TOOLS/FIELD FURNISHED SUPPLIES

⚠ WARNING

TO AVOID PERSONAL INJURY, ADEQUATE PROTECTIVE CLOTHING MUST BE WORN AND PRECAUTIONS IN HANDLING AND INSTALLING THIS EQUIPMENT MUST BE PRACTICED AT ALL TIMES.

- Power Drill/Driver and Extension
- T25 TORX Bits
- Needle Nose Pliers
- Wire Stripper/Cutter
- Screwdriver with Slotted Bit
- Wire Nuts for Power/Control Wiring
- Supplies for Piping Connections to Hot Water Coils (as appropriate)

1.02 INSPECTION/UNPACKING/HANDLING

Plenums, with and without wet heat coils installed, are shipped to the job site on a wooden skid and are enclosed in shrink wrap. Do not stack plenums. Protect plenums from outside weather conditions. When freeblow plenums are ordered with grilles, the grilles are shipped separately in corrugated containers. Part numbers for the freeblow plenum grilles are as follows:

Part #	Description
80705	8” x 4” double deflection freeblow plenum side grille
80676	Supply grille for 24/30/36/40
81085	Supply grille for 49/60

IMPORTANT

IMMEDIATELY UPON RECEIPT, INSPECT THIS EQUIPMENT TO DETERMINE VISIBLE AND CONCEALED DAMAGE. ALL DAMAGE MUST BE REPORTED TO THE FREIGHT CARRIER WITHIN 15 DAYS, ON THE FREIGHT CARRIER’S FORM.

The part number on the plenum label must be matched to the Scholar QV™ model, as designated by the identification label on the lower left cabinet panel of the Scholar QV unit.

A. **Freeblow and Ducted Plenums to be used with electric resistance heat or no heat** have part numbers and model numbers, and are installed on the Scholar QV™ models/designated as follows:

1. For models 24/30/36/40.

Part #	Description
S/03212	Plenum (16” high)
	Plenum (17 to 40” high) is special order

2. For models 49/60.

Part #	Description
S/03247	Plenum (18” high)
	Plenum (19 to 40” high) is special order

B. **Freeblow and ducted plenums equipped with a wet heat coil** have the following part numbers and go with the designated models.

1. For models 24/30/36/40.

Part #	Description
S/03214	Hot water plenum (18” high)
	Hot water plenums greater than 18” tall are special order.

2. For models 49/60.

Part #	Description
S/03249	Hot water plenum (18” high)
	Hot water plenums greater than 18” tall are special order.

Remove the shrink wrap from the plenum and dispose of the wooden skid. Retain the bag of sheet metal screws to fasten the plenum to the top of the cabinet.

⚠ WARNING

THIS EQUIPMENT MUST BE INSTALLED IN CONFORMANCE WITH ALL APPLICABLE LOCAL AND NATIONAL ELECTRICAL, PLUMBING AND BUILDING CODES.

THIS EQUIPMENT SHOULD BE INSTALLED AND SERVICED ONLY BY A TRAINED PROFESSIONAL HEAT PUMP SERVICE PERSON.

⚠ WARNING

BEFORE INSTALLING, SERVICING OR MAINTAINING THIS EQUIPMENT, SWITCH THE ELECTRIC POWER TO “OFF” AT THE DISCONNECT LOCATED BEHIND THE KEY LOCKED DOOR ON THE LOWER FRONT PANEL. FAILURE TO DO THIS COULD RESULT IN PROPERTY DAMAGE, BODILY INJURY OR DEATH.

Remove the front plenum panel and the top plenum panel from the plenum. Retain the screws and panels for reinstallation after plenum has been installed.

If the Scholar QV™ heat pump or air conditioner is equipped with electric resistance heat, **remove the protective metal cover from over the heater elements**, prior to installing the plenum. Follow the directions on the labeled metal cover protecting the heater element. On the 2, 2-1/2, 3 and 3-1/2 ton units, the electric heater assembly is shipped on top of the unit. On 4 and 5 ton units, the heater assembly is strapped to the back of the unit under the outdoor air box.

For freeblow plenum and standard height ducted plenums, the plenums should be installed onto the Scholar QV™ cabinet, prior to installing the cabinet into its final location. On extended height ducted plenums, the Scholar QV heat pump or air conditioner may have to be installed in its final location before the ducted plenum is fastened to the top of the cabinet.

IMPORTANT

IF THE PLENUM TO BE INSTALLED IS EQUIPPED WITH A HOT WATER COIL, THE KNOCKOUT LOCATED IN THE TOP OF THE SCHOLAR QV™ HEAT PUMP OR AIR CONDITIONER CABINET WILL HAVE TO BE REMOVED SO WIRES FROM THE FREEZE THERMOSTAT (AND BYPASS VALVE ON HOT WATER COIL) CAN BE RUN DOWN TO THE CONTROL CENTER WHEN PLENUM IS INSTALLED.

1.03 PLENUM INSTALLATION

After the plenum has been unpackaged, it must be put into the final configuration required - either a freeblow plenum or a ducted plenum.

A. If a **freeblow plenum** is required, the blank off plate on the front of the plenum panel should be removed. Also remove the ducted flange from the inside top of the plenum. See Figure 1. Dispose of the ducted flange. Place the blank off plate on top of the plenum (where the duct flange was mounted) and fasten it with the retained screws. With a sharp knife, cut and remove the insulation from the perimeter of the plenum opening in the front, to receive the supply grille. If a side grille(s) is to be installed, remove the cover plate(s) from the side of the plenum, as shown in Figure 1, and cut insulation from the perimeter of the appropriate plenum side opening. If only one side grille is to be installed, be sure to locate it properly on the plenum. Install the supply and side grilles, as appropriate, with the retained screws.

B. If a **ducted plenum** is required, leave the blank off plate and cover plates for side grille in place, on the plenum as received. With a sharp knife, cut and remove the insulation from the perimeter of the duct flange opening on top of the plenum. Remove the duct flange from inside the plenum and reattach it to the top of the plenum. Swap the front and back panels of the plenum. This should put the blank off plate facing the exterior wall and not visible from the classroom.

Figure 1. Plenums as Shipped

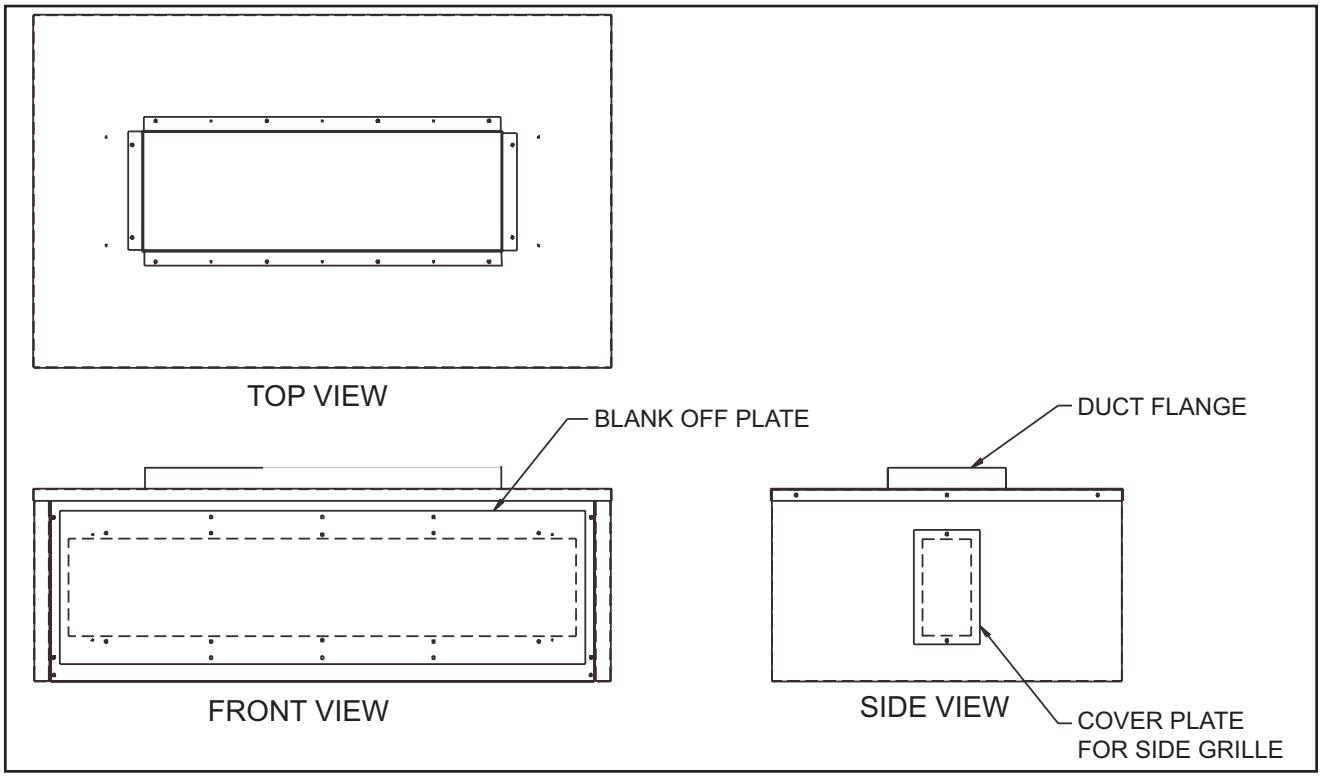

C. Carefully raise the plenum into its location atop the Scholar QV™ cabinet as shown in Figure 2. Align the through holes (three on each side of the plenum base) with the matching holes in the top of the cabinet. Using screws supplied with the plenum, fasten the plenum to the cabinet, adjusting the alignment of the plenum with the cabinet as necessary before final torquing the screw fasteners.

The air distribution system which is field supplied and installed downstream of the specified **ducted plenum** must be engineered to assure sufficient air flow, even under adverse conditions, such as dirty filters. The information provided in Figure 1, Appendix A should be used to design the air distribution system duct size leaving the Scholar QV™ unit, keeping the external static pressure to a minimum.

Applications using duct work should be designed and installed in accordance with the current edition of the National Fire Protection Association codes and standards 90A and 90B. The duct system must be engineered to insure sufficient air flow through the unit to prevent over-heating of the heater element. This includes proper supply duct sizing, sufficient quantity of supply registers, adequate return and filter area. Ductwork must be of correct material and must be properly insulated. The duct work must be constructed of galvanized steel with a minimum thickness of .019. Ductwork must be firmly attached, secured and sealed to prevent air leakage. Do not use duct liner on inside of supply duct within four feet of the unit.

Galvanized metal duct extensions should be used to simplify connections to ductwork and grilles. Use fabric boots to prevent the transmission of vibration through the duct system. The fabric must be U.L. rated to a minimum of 197°F.

Figure 2. Plenum Installation

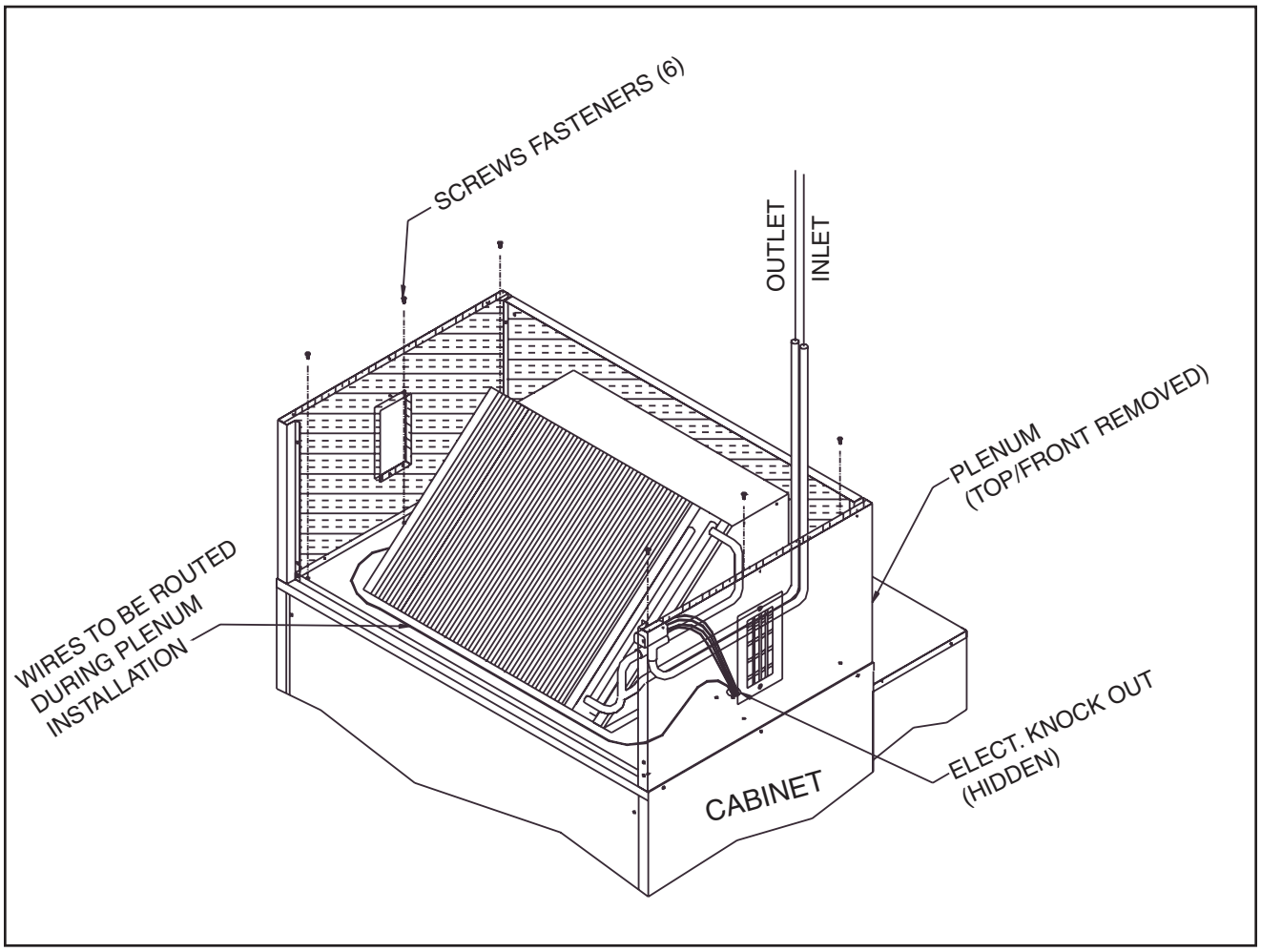

1.04 ELECTRICAL/PIPING HOOK-UP

If the freeblow or ducted plenum (without the wet heat coil) is installed as noted in Article 1.03, there is no further electrical or piping hook-up required. If, however, a wet heat coil was ordered with the plenum, follow these instructions to complete the installation.

A. Electrical Hook-up

1. The **hot water coil** has a 24-volt freeze protection thermostat located on the coil. It may also have a diverter valve to activate the water flow through the coil. The leads from the freeze protection thermostat and the diverter valve are run down the knockout hole noted in Figure 2, and to the control center. The leads are then connected to the terminals in the control center as denoted on the wire leads.

B. Piping Hook-up

1. For the **hot water coil**, the supply and return connections to the coil are shown in Figure 2. All other controls for the hot water system are external to the coiled plenum. All materials (piping and controls) are field supplied. Prior to making piping connections to the stub-outs shown in Figure 2, the plenum top panel should be reinstalled and fastened in place. Access to the connection locations is through the opening on the front of the plenum. After water piping connections are completed, leak check the system, and check the proper operation of the bypass valve after turning the electrical disconnect back to “ON” position.

2. After turning the disconnect to “OFF” position, replace appropriate plenum and cabinet panels after rechecking and tightening all new electrical connections and checking wiring for appropriate protection from sharp edges and clearance from moving parts, etc.

APPENDIX D - TRIM STRIP INSTALLATION

1.01 TOOLS/FIELD FURNISHED SUPPLIES

⚠ WARNING

TO AVOID PERSONAL INJURY, ADEQUATE PROTECTIVE CLOTHING MUST BE WORN AND PRECAUTIONS IN HANDLING AND INSTALLING THIS EQUIPMENT MUST BE PRACTICED AT ALL TIMES.

- Power Drill/Driver and Extension
- Tape Measure
- Self-tapping Sheet Metal Screws, 1/2” Long (one for every foot of trim strip)
- Bit for Field Supplied Sheet Metal Screws
- Metal Saw to Cut Trim Strips to Required Lengths
- File to Debur Field Sawed/Cut Metal Edges
- Acoustical Insulation

1.02 INSPECTION/UNPACKING/HANDLING

Trim strips are ordered to fill the gap between the Scholar QV™ cabinet and the finished inside surface of the wall, when the cabinet is offset from the wall.

Trim strips are 10 inches in depth and have a 1 inch 90° flange on one end to fit flush to the finished inside wall. Trim strips can be used to accommodate cabinets with up to a 9 inch offset from the wall.

Trim strips are packaged in corrugated marked on the outside with part number 03027 and strapped to a skid for shipment to the job site. They are painted to match the cabinet color. The finished painted surfaces have a protective white film on the surface to protect the surfaces from damage. Leave the film on the painted surfaces until the strips have been installed and construction work in the area is completed.

IMPORTANT

IMMEDIATELY UPON RECEIPT, INSPECT THIS EQUIPMENT TO DETERMINE VISIBLE AND CONCEALED DAMAGE. ALL DAMAGE MUST BE REPORTED TO THE FREIGHT CARRIER WITHIN 15 DAYS, ON THE FREIGHT CARRIER’S FORM.

1.03 PREPARATION OF SCHOLAR QV™ HEAT PUMP AND AIR CONDITIONER FOR TRIM STRIP INSTALLATION

The Scholar QV™ heat pump and air conditioner cabinet and plenum (as appropriate) must be installed, with the floor fasteners in place and the outside louver installed, to ensure the fixed location of the system prior to installation of the trim strips. Check the cabinet for vertical plumb and parallelism to the inside of the finished wall prior to installing the trim strips.

1.04 INSTALLATION OF TRIM STRIPS

Cut the trim strips to appropriate lengths to fill the gaps between the finished inside wall and the cabinet sides and top. To reduce sound transmission through the trim strips, apply acoustical insulation on the side of the strips that face the outdoor air box.

Trim strips are to be installed as shown in Figure 1. Debur all field cut or sawed metal edges.

IMPORTANT
CAREFULLY MARK, INDENT AND DRIVE SCREWS THROUGH THE TRIM STRIPS TO AVOID DAMAGING THE PAINTED SURFACES.

Field supplied screws should be self tapping zinc coated sheet metal type, 1/2" long with head color of satin aluminum, to match the cabinet finish.

Figure 1. Installation of Trim Strips to Scholar QV™ Heat Pump or Air Conditioner

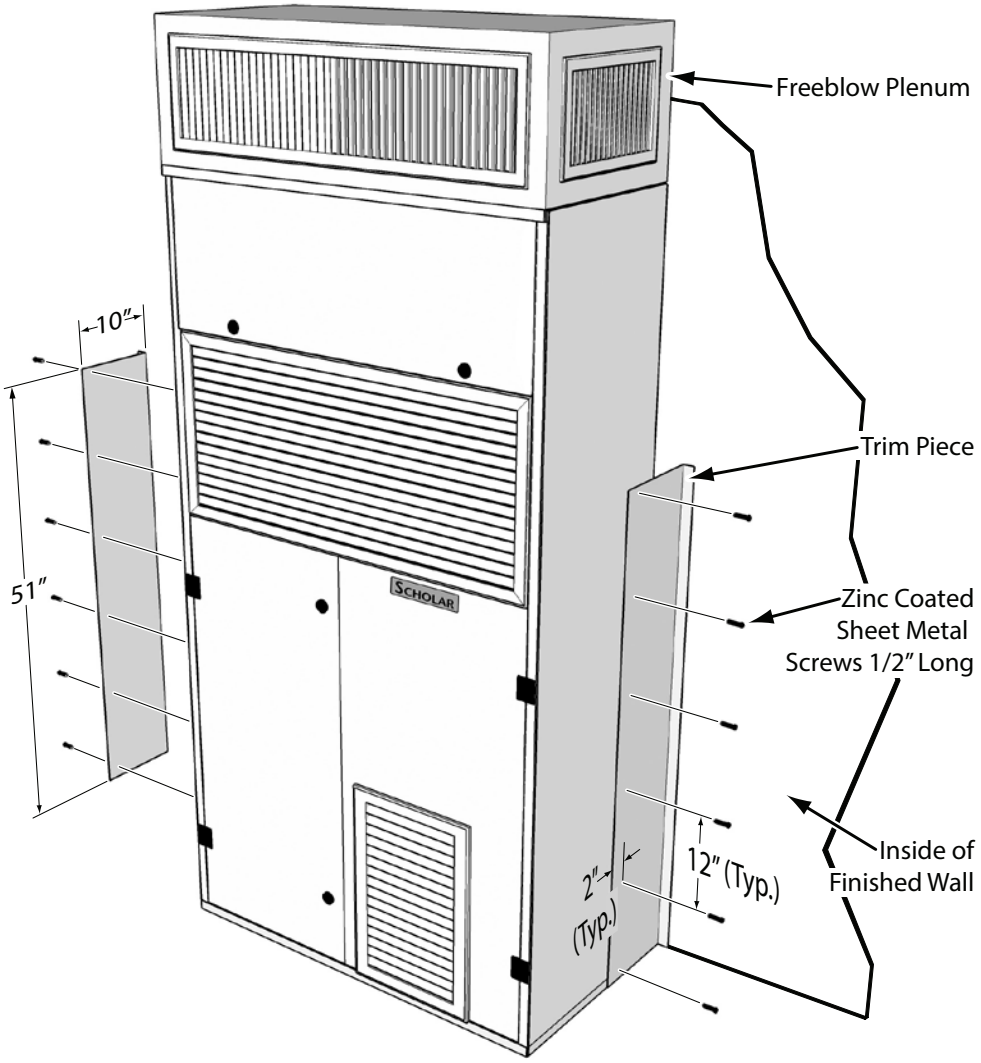

APPENDIX E - WALL BRACKET INSTALLATION

1.01 TOOLS/FIELD FURNISHED SUPPLIES

⚠ WARNING

TO AVOID PERSONAL INJURY, ADEQUATE PROTECTIVE CLOTHING MUST BE WORN AND PRECAUTIONS IN HANDLING AND INSTALLING THIS EQUIPMENT MUST BE PRACTICED AT ALL TIMES.

- Power Drill/Driver and Extension
- Tape Measure
- Bits for Wall Anchors, Field Supplied Sheet Metal Screws
- Masonry Penetrating Wall Anchors (4)
- #10 x 1/2” Self-Tapping Sheet Metal Screws (4)
- Ladder (as appropriate)
- File for Deburring Field Cut Metal Edges

1.02 INSPECTION/UNPACKING/HANDLING

Wall brackets are shipped to the job site in a corrugated container marked on the outside with part number MB/03901. The wall brackets are universal and are adaptable to any model Scholar QV™ heat pump or air conditioner. The wall brackets provide additional means of securing the Scholar QV heat pump where deemed necessary by the specifier. The wall brackets can be applied to any cabinet with a position of flush with the finished inside surface of the wall. Brackets are covered with a protective film on the exposed painted surface. Leave film on surface to protect against damage. Remove film when brackets are installed and construction has been completed.

IMPORTANT

IMMEDIATELY UPON RECEIPT, INSPECT THIS EQUIPMENT TO DETERMINE VISIBLE AND CONCEALED DAMAGE. ALL DAMAGE MUST BE REPORTED TO THE FREIGHT CARRIER WITHIN 15 DAYS, ON THE FREIGHT CARRIER’S FORM.

1.03 PREPARATION OF SCHOLAR QV™ HEAT PUMP OR AIR CONDITIONER FOR WALL BRACKET INSTALLATION

The Scholar QV™ heat pump and air conditioner and plenum (as appropriate) must be installed, with the floor fasteners in place and the outside grille installed, to ensure the fixed location of the system prior to installation of the wall brackets. Check the cabinet for vertical plumb and parallelism to the inside of the finished wall prior to installing the wall brackets.

1.04 INSTALLATION OF THE WALL BRACKETS

⚠ WARNING

FOR HEAT PUMP OR AIR CONDITIONERS WITH PLENUMS, BE SURE TO INSTALL WALL BRACKETS ON THE CABINET (VERSUS THE PLENUM) TO ENSURE MAXIMUM HOLDING STRENGTH.

A. Measure and mark on the inside surface of the wall where the two anchors for each bracket are to be placed. Bore holes in the bracket and wall appropriate to accept field supplied anchors. Be sure to put the bracket up so that the side with pilot holes is on the cabinet and the blank side is on the wall. See Figure 1. Anchor bracket(s) to the wall.

B. Install sturdy self-tapping sheet metal screws into two bracket pilot holes and into cabinet as shown in Figure 1. Screws should be no longer than 1/2".

Figure 1. Installation of Wall Brackets (One on Each Side of Unit)

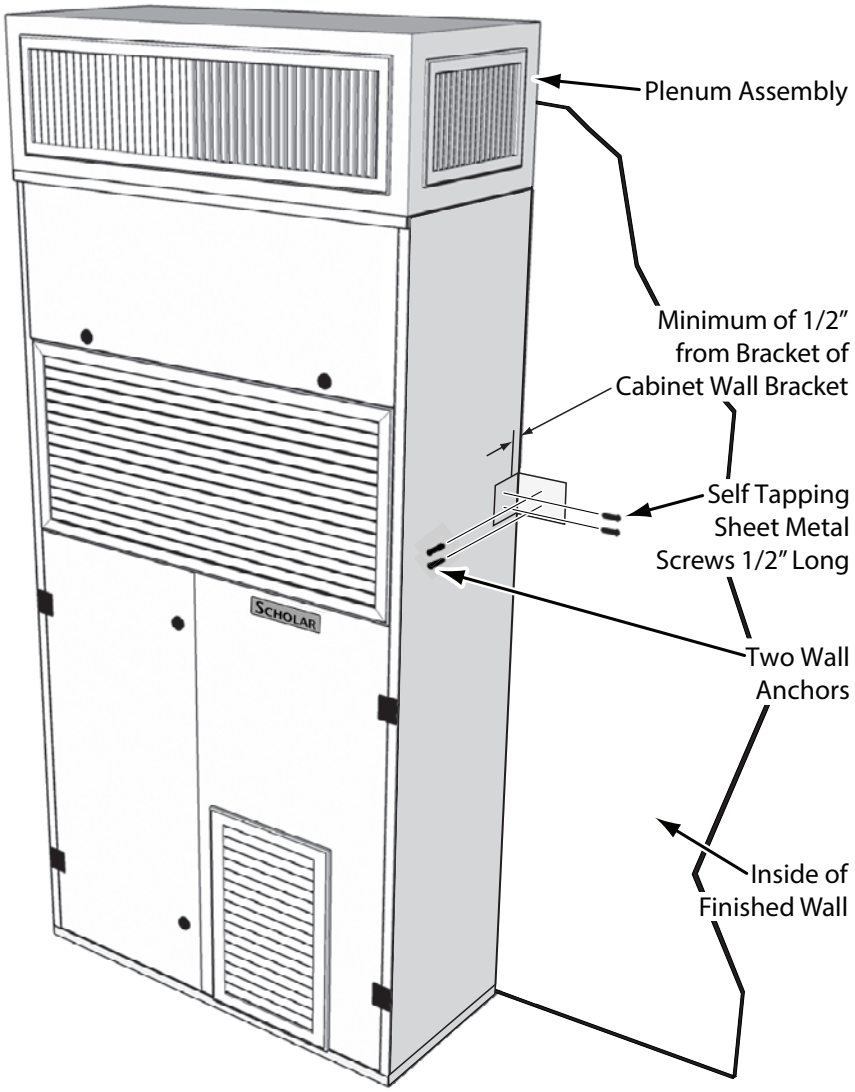

APPENDIX F - OUTDOOR LOUVER/COLLAR INSTALLATION

1.01 TOOLS/FIELD FURNISHED SUPPLIES

⚠ WARNING

TO AVOID PERSONAL INJURY, ADEQUATE PROTECTIVE CLOTHING MUST BE WORN AND PRECAUTIONS IN HANDLING AND INSTALLING THIS EQUIPMENT MUST BE PRACTICED AT ALL TIMES.

- Power Drill/Driver and Extension
- T25 TORX Bits
- Sealant Caulk (tube)
- Caulking Applicator
- Ladder (as appropriate)
- Masonry Penetrating Fasteners (6 per collar)
- Scribe/punch

1.02 INSPECTION/UNPACKING/HANDLING

Louver/collar assemblies, louvers and collars are shipped to the job site in corrugated containers. Do not stack these containers. Louvers and collars are to be handled as fragile items.

IMPORTANT

IMMEDIATELY UPON RECEIPT, INSPECT THIS EQUIPMENT TO DETERMINE VISIBLE AND CONCEALED DAMAGE. ALL DAMAGE MUST BE REPORTED TO THE FREIGHT CARRIER WITHIN 15 DAYS, ON THE FREIGHT CARRIER'S FORM

The part number on the louver/collar package should be matched to the Scholar QV™ model, as designated by the identification label on the lower left cabinet panel of the Scholar QV heat pump or air conditioner.

A. For models 24/30/36/40, the following louver/collar assemblies, louvers and collars match.

Part Number	Description
80760	Clear anodized louver/collar assembly
80761	Clear anodized louver
80762	Clear anodized collar
80763	Dark bronze louver/collar assembly
80764	Dark bronze louver
80765	Dark bronze collar

B. For models 49/60, the following louver/collar assemblies, louvers and collars match.

Part Number	Description
81167	Clear anodized louver/collar assembly
81169	Clear anodized louver
81173	Clear anodized collar
81168	Dark bronze louver/collar assembly
81171	Dark bronze louver
81172	Dark bronze collar

To minimize damage, remove the louver and louver parts from the corrugated container just prior to installation. Retain the bag of screws and caps for installation of the louver.

⚠ WARNING

THIS EQUIPMENT MUST BE INSTALLED IN CONFORMANCE WITH ALL APPLICABLE LOCAL AND NATIONAL ELECTRICAL, PLUMBING AND BUILDING CODES.

THIS EQUIPMENT SHOULD BE INSTALLED AND SERVICED ONLY BY A TRAINED PROFESSIONAL HVAC SERVICE PERSON.

⚠ WARNING

BEFORE INSTALLING, SERVICING OR MAINTAINING THIS EQUIPMENT, SWITCH THE ELECTRIC POWER TO "OFF" AT THE DISCONNECT LOCATED BEHIND THE KEY LOCKED DOOR ON THE LOWER FRONT PANEL. FAILURE TO DO THIS COULD RESULT IN PROPERTY DAMAGE, BODILY INJURY OR DEATH.

1.03 PREPARATION OF SCHOLAR QV™ HEAT PUMP OR AIR CONDITIONER FOR LOUVER/COLLAR INSTALLATION

Note: Custom louvers may have installation requirements different from louvers with a collar. Follow engineer's drawings and instructions for installation of these louvers.

The Scholar QV™ heat pump or air conditioner should be installed following the instructions in this manual. After installation, the Scholar QV air box should be from 1-1/4" to 1-3/8" from the outside surface of the finished wall, as shown in Figure 1.

Figure 1. Dimension between Scholar QV™ Air Box and Finished Outside Wall for Outdoor Louver/Collar Assembly Installation.

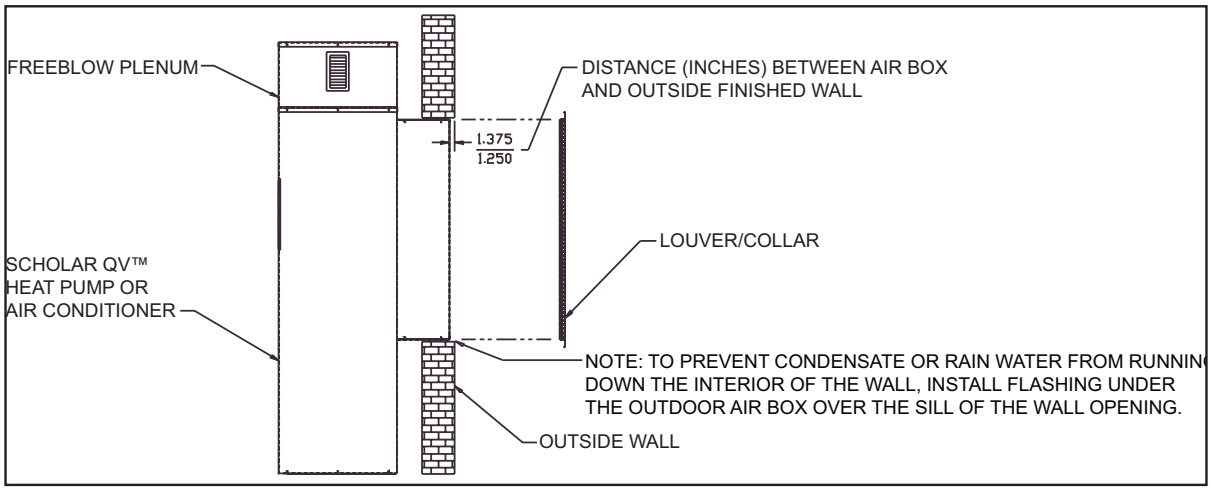

⚠ CAUTION

WHEN FASTENING LOUVER/COLLAR ASSEMBLY TO AIR BOX (OR EXTENSION) DO NOT OVERTIGHTEN LOUVER SCREWS. OVERTIGHTENING SCREWS WILL CAUSE DAMAGE AND WARP THE LOUVER/COLLAR ASSEMBLY.

1.04 INSTALLATION OF LOUVER/COLLAR ASSEMBLY, LOUVER AND COLLAR

A. Louver/Collar Assembly

The preassembled louver/collar is fastened from the outside of the building in one assembly.

1. The louver/collar assembly is **fastened directly to the air box** as shown in Figure 2, with six screws supplied with the louver/collar. Prior to installing the louver, apply caulk around the perimeter flange of the outdoor air box. Be careful not to block the weep holes on the bottom flange. To ensure proper fit up of the collar to the outside wall surface, be sure the unit is positioned as shown in Figure 1. After the six screws have been installed and appropriately tightened (do not over torque), the color coordinated screw caps are snapped into place to cover the screw fastener heads. Provide a water seal around the top & both sides edges of the collar/wall interface, by applying an even bead of sealant caulk at the collar/wall interface.

2. The louver/collar assembly is **fastened directly to the outside wall**, as shown in Figure 2.

B. Louver

The louver itself may be fastened to the air box as shown in Figure 2.

C. Collar

The collar itself may be fastened to the outside wall by following the instructions in Figure 2.

IMPORTANT

BE SURE AIR BOX IS PLACED 1-3/8” TO 1-1/2” INSET FROM OUTSIDE WALL SURFACE.

USE LOUVER/COLLAR SCREWS THAT ARE COMPATIBLE WITH THE COLOR OF THE COLLAR.

D. Secondary Drain Line - **IMPORTANT**

The secondary drain line is located in the outdoor air box of the Scholar QV unit. This drain line must be routed to the outside between the blades in the outdoor louver. In the event that the primary drain does not function, the condensate will flow out of the unit and should be visible on the exterior of the school.

Figure 2. Installation of Louver/Collar Assembly to Air Box

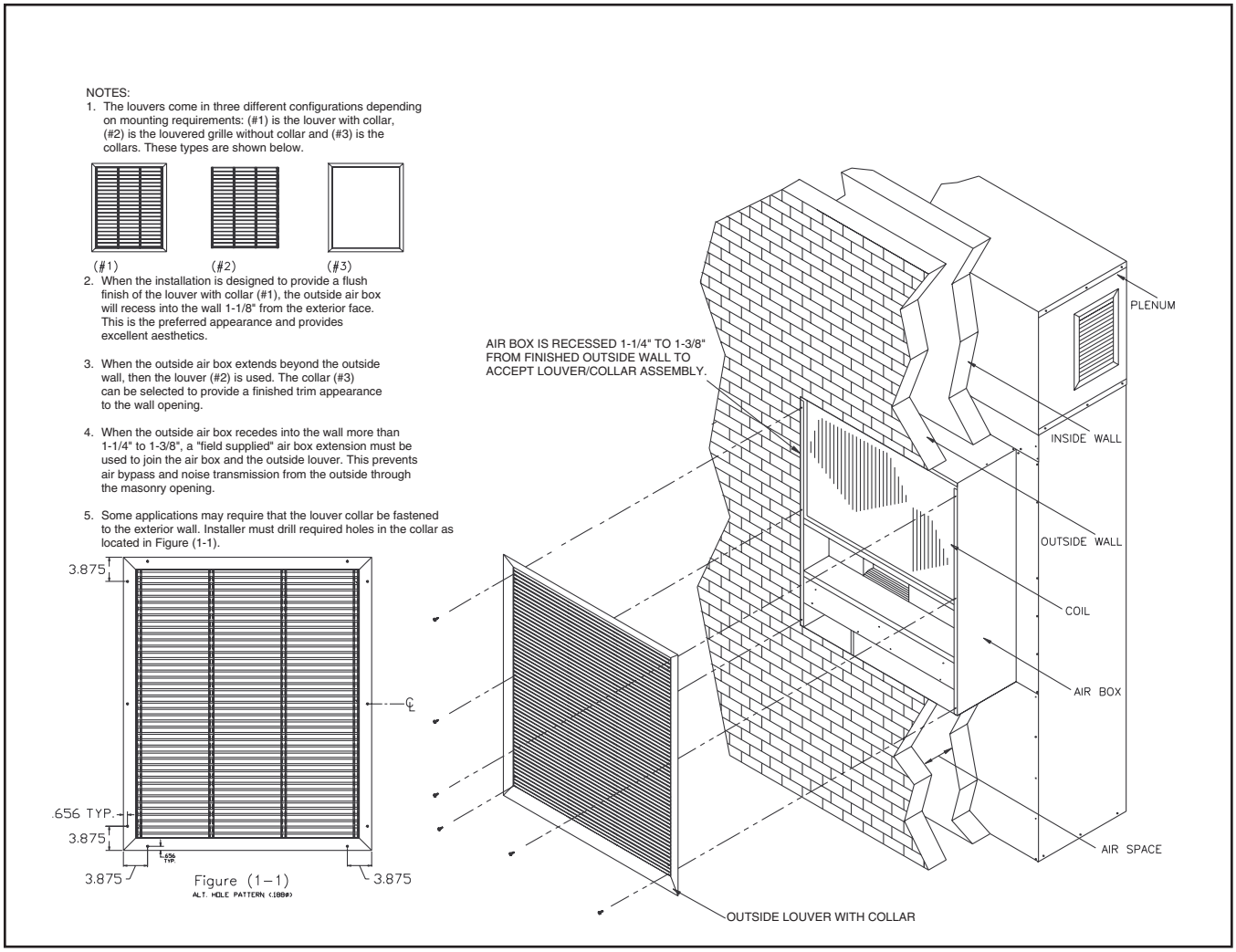

APPENDIX G - SOUND REDUCTION PANEL

1.01 TOOLS/FIELD FURNISHED SUPPLIES

⚠ WARNING

TO AVOID PERSONAL INJURY, ADEQUATE PROTECTIVE CLOTHING MUST BE WORN AND PRECAUTIONS IN HANDLING AND INSTALLING THIS EQUIPMENT MUST BE PRACTICED AT ALL TIMES.

- Power Drill/Driver and Extension
- T25 TORX Bits

1.02 INSPECTION/UNPACKING/HANDLING

The sound reduction panel components are shipped to the job site in a wooden crate, after being enclosed in shrink wrap. Do not stack the sound reduction panels and do not expose them to outdoor weather conditions. Sound reduction panel components with painted finish surfaces are coated with a protective white plastic film for protection. Leave the film on until the installation is completed and construction work in the area is finished. Sound reduction panel components are to be considered as fragile, and handled accordingly.

IMPORTANT

IMMEDIATELY UPON RECEIPT, INSPECT THIS EQUIPMENT TO DETERMINE VISIBLE AND CONCEALED DAMAGE. ALL DAMAGE MUST BE REPORTED TO THE FREIGHT CARRIER WITHIN 15 DAYS, ON THE FREIGHT CARRIER'S FORM.

The part number of the sound reduction panel must be matched to the proper Scholar QV™ model number. Scholar QV model numbers are found in the lower front corner of the left side cabinet panel.

Sound Reduction Panel Part Number	Scholar QV™ Cabinet Models
S/04263	Models 24/30/36/40
S/04195	Models 49/60

For the best installation results, the Scholar QV™ unit should be installed, into the wall opening and secured to the floor, prior to installing the sound reduction panel.

Remove all sound reduction panel parts from the wooden container and identify them referencing Figure 1. Retain the bag of screws for use in assembling and installing the sound panel components.

Figure 1. Sound Reduction Panel Installation

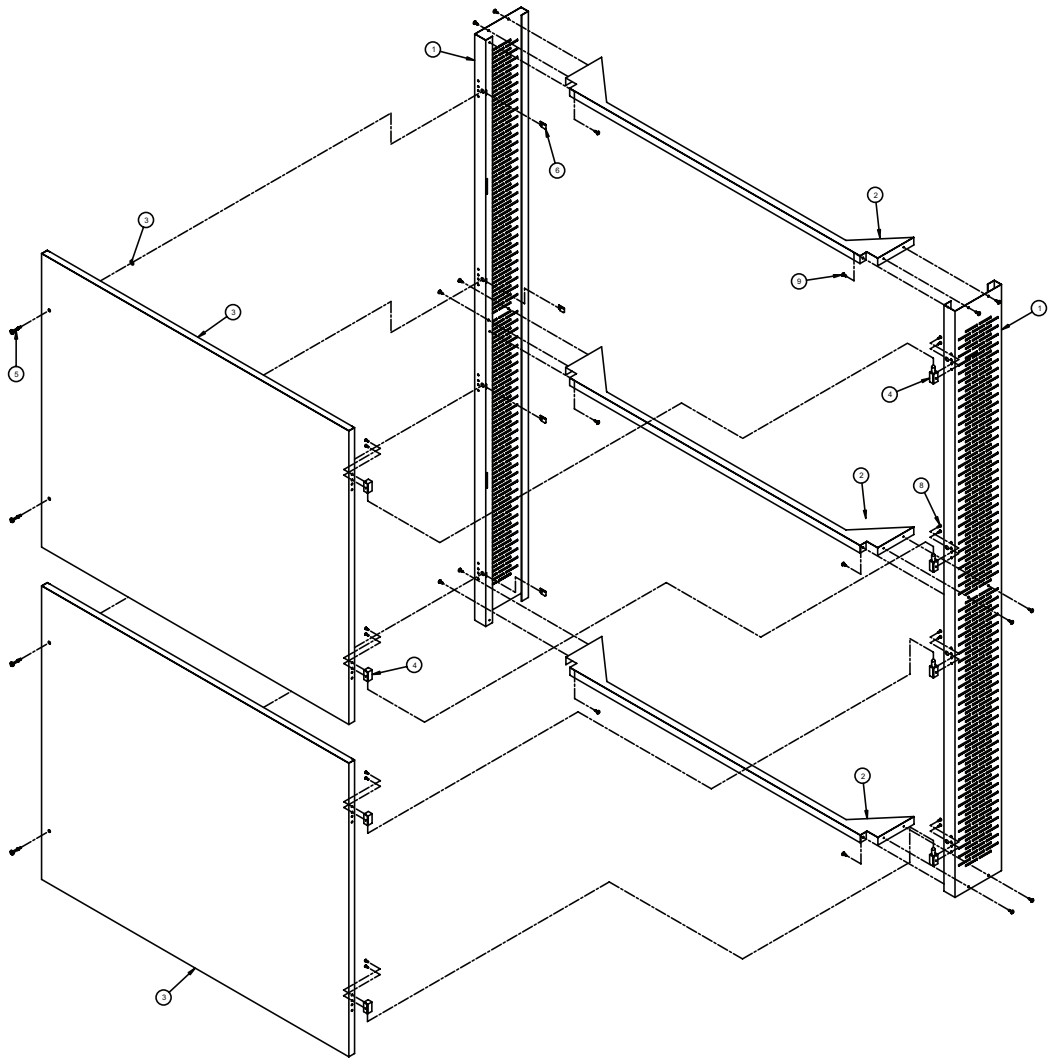

ITEM	PART NO.	DESCRIPTION	QTY.
9	P/90012	#10 x 1/2" TORX HEAD SCREW	18
8	90934	10-32 x 1/4" ZINC PLATED MACHINE SCREW	16
7	90936	CAPTIVE SCREW RETAINER RING	4
6	90931	J TYPE RECEPTACLE FOR QUICK-OPENING CAPTIVE SCREW	4
5	90930	QUICK-OPENING CAPTIVE SCREW-SLOTTED HEAD	4
4	90932	METAL IN-LINE LIFT-OFF HINGES	4
3	SD/04200	SOUND PANEL FRONT DOOR ASSY	2
2	MD/04282	SOUND PANEL BRACE WITH HINGED DOORS	3
1	MD/04280	SOUND PANEL SIDE PANEL WITH HINGED DOORS	2

1.03 INSTALLATION

⚠ WARNING

THIS EQUIPMENT MUST BE INSTALLED IN CONFORMANCE WITH ALL APPLICABLE LOCAL AND NATIONAL ELECTRICAL, PLUMBING AND BUILDING CODES.

THIS EQUIPMENT SHOULD BE INSTALLED AND SERVICED ONLY BY A TRAINED PROFESSIONAL HVAC SERVICE PERSON.

⚠ WARNING

BEFORE INSTALLING, SERVICING OR MAINTAINING THIS EQUIPMENT, SWITCH THE ELECTRIC POWER TO "OFF" AT THE DISCONNECT LOCATED BEHIND THE KEY LOCKED DOOR ON THE LOWER FRONT PANEL. FAILURE TO DO THIS COULD RESULT IN PROPERTY DAMAGE, BODILY INJURY OR DEATH.

A. Assemble the 3 support braces to the left and right side panels with #10 sheet metal screws provided (6 screw per brace).

B. The Sound Panel can be assembled with the hinges on left or right side of framework. With the basic framework complete determine which side of the frame will need to be hinged.

C. Assemble the bottom half of the lift off hinge (quantity 4) to the appropriate side of the framework with the metal post up on the hinge. Assemble the top half of the lift off hinge to the front doors (quantity 2 per door) with hole in the hinge facing down. Use the #10-32 x ¼" long screws provided for assembling both bottom and top hinge parts.

D. Press J nuts on the opposite side of framework from hinges.

E. Place framework, without doors attached against cabinet 6" from the bottom of the cabinet, and flush with the sides of the cabinet. Place a mark (4 each side) on the cabinet through the mounting holes in the framework. Remove framework from cabinet and drill 1/8" diameter holes at the marked locations on the cabinet. Reattach framework using #10 x ½" long sheet metal screws provided.

F. Slide the quick opening captive screws (quantity 4) through the holes in the front doors and push retaining clip onto backside of captive screws.

G. Attach doors (lower first) to framework by slipping hinge on door over the hinge post on framework. Close doors and tighten captive screws to framework.