Marvair®
ISO 9001:2015 REGISTERED COMPANY
AIRXCEL™, Inc.

ModPac

Air Conditioner Product Manual
Vertical Wall-Mount Air Conditioners with Front Control Box Panel

Installation & Operation Manual
9 EER Vertical Wall-Mount Air Conditioners

MODELS:

AVPA 12-20-24-30-36-42-48-60

AHRI CERTIFIED® www.ahridirectory.org Single Package Vertical AC AHRI Standard 390 · CE · Intertek · NSF Registered to ISO 9001 · Designed, Engineered & Assembled In the USA

IMPORTANT

This manual may include information for options and features which may not be included on the unit being installed. Refer to the unit data label or Model Identification to determine which features and options this unit is equipped with.

INSTALLER: Affix the instructions on the inside of the building adjacent to the thermostat.
END USER: Retain this manual for future reference.

Manufactured By:
A Division of the AIRXCEL® Commercial Group
P.O. Box 400 • Cordele, Georgia 31010 • 156 Seedling Drive • Cordele, Georgia 31015
(229) 273-3636 • Fax (229) 273-5154
E-mail: marvairsales@airxcel.com • Internet: www.Marvair.com

The most current version of this manual can be found at www.Marvair.com.

Marvair ModPac Installation & Operation Manual 03/2019 Rev. 9
Part #01690

How To Use This Manual

This manual is intended to be a guide to the Marvair® ModPac family of vertical air conditioners. It contains installation, troubleshooting, maintenance, warranty, and application information. The information contained in this manual is to be used by the installer as a guide only. This manual does not supersede or circumvent any applicable national or local codes.

If you are installing the ModPac unit, first read Chapter 1 and scan the entire manual before beginning the installation as described in Chapter 2. Chapter 1 contains general, descriptive information and provides an overview which can speed up the installation process and simplify troubleshooting.

If a malfunction occurs, follow this troubleshooting sequence:

1. Make sure you understand how the ModPac unit works (Chapters 1 & 3).
2. Identify and correct installation errors (Chapter 2).
3. Refer to the troubleshooting information in Chapter 4.

If you are still unable to correct the problem, contact the Factory at 1 (229) 273-3636 for additional assistance.

Please read the following "Important Safety Precautions" before beginning any work.

Important Safety Precautions

1. USE CARE when LIFTING or TRANSPORTING equipment.
2. TRANSPORT the UNIT UPRIGHT. Laying it down on its side may cause oil to leave the compressor and breakage or damage to other components.
3. TURN ELECTRICAL POWER OFF AT THE breaker or fuse box BEFORE installing or working on the equipment. LINE VOLTAGES ARE HAZARDOUS or LETHAL.
4. OBSERVE and COMPLY with ALL applicable PLUMBING, ELECTRICAL, and BUILDING CODES and ordinances.
5. SERVICE may be performed ONLY by QUALIFIED and EXPERIENCED PERSONS.
   - **Wear safety goggles when servicing the refrigeration circuit**
   - **Beware of hot surfaces on refrigerant circuit components**
   - **Beware of sharp edges on sheet metal components**
   - **Use care when recovering or adding refrigerant**
6. **Use COMMON SENSE - BE SAFETY-CONSCIOUS**

This is the safety alert symbol ⚠. When you see this symbol on the ModPac unit and in the instruction manuals be alert to the potential for personal injury. Understand the signal word DANGER, WARNING and CAUTION. These words are used to identify levels of the seriousness of the hazard.

⚠ DANGER	Failure to comply will result in death or severe personal injury and/or property damage.
⚠ WARNING	Failure to comply could result in death or severe personal injury and/or property damage.
⚠ CAUTION	Failure to comply could result in minor personal injury and/or property damage.
IMPORTANT	Used to point out helpful info that will result in improved installation, reliability or operation.

Specifications subject to change without notice.

© 03/2019 Airxcel Commercial Group

⚠ WARNING

- **If the information in these instructions are not followed exactly, a fire may result causing property damage, personal injury or loss of life.**
- **Read all instructions carefully prior to beginning the installation. Do not begin installation if you do not understand any of the instructions.**
- **Improper installation, adjustment, alteration, service or maintenance can cause property damage, personal injury or loss of life.**
- **Installation and service must be performed by a qualified installer or service agency in accordance with these instructions and in compliance with all codes and requirements of authorities having jurisdiction.**

Table of Contents

Chapter 1. ModPac Description & Specifications
1.1 General Description 5
1.2 Model Identification 5
1.3 Serial Number Date Code 5
1.4 General Operation 6
1.5 M5 Configuration 6
1.6 A2 Internal Disconnect 6
1.7 Elcontronic Control Board Modes of Operation 6
1.8 Electrical Diagrams 8

Chapter 2. Installation
2.1 Equipment Inspection 10
2.2 Installation Requirements 10
2.3 Installation Materials 12
2.4 Porting and Duct Work 14
2.5 Fresh Air Hood Installation 15
2.6 Bottom Bracket Installation 15
2.7 Mounting the Unit 16
2.8 Electrical Connections 17

Chapter 3. Start-Up
3.1 Check-Out of Cooling Cycle 20
3.2 Check-Out of Heating Cycle 20

Chapter 4. Troubleshooting
4.1 Overview 21
4.2 Failure Symptoms Guide 22
4.3 Compressor Troubleshooting 23
4.4 Electric Heat Controls 24

Chapter 5. Ratings & Specifications
5.1 Ratings & Specifications 25

Chapter 6. Maintenance
6.1 Scheduled Maintenance 26

Chapter 7. Warranty Information
7.1 Airxcel Commercial Group Limited Product Warranty Statement 27

Exploded Views & Parts Lists 28

Appendix A - Installation Instructions of Field Installed Electric Heat 28

Illustrations

Figure 1. Typical Electrical Schematic for Units with the PC Board 9
Figure 2. Damper Air Path 12
Figure 3a. Fresh Air Hood Adjustment for Models AVPA20-60 15
Figure 3b. Fresh Air Hood Adjustment for AVPA12 15
Figure 4. Wall Mounting Detail 16
Figure 5. Thermostat Connection Diagram 19
Figure 6. Typical Configuration for Single Element Heater 24

Tables

Table 1. Minimum Clearances 11
Table 2. Voltage Limitations 11
Table 3. Maximum Static Pressure 15
Table 4. CFM @ ESP 25
Table 5. Filter Sizes 25
Table 6. Shipping Weights 25

Chapter 1. Description & Specifications

1.1 General Description

The Marvair® ModPac air conditioner line is a series of vertical wall-mounted air conditioning systems that provide heating and cooling for modular construction offices and classrooms. The series includes four cabinet sizes and nominal cooling capacities from 12,000 to 56,500 BTUH. Resistance heating elements are available in various wattages. See Appendix A for instructions on field installation of electric heat.

Marvair's ModPac models are designed for easy installation and service. Major components are accessible for service beneath external panels.

1.2 Model Identification

AVP A • AC • ••• M5 • • • ••• •••

AVP — **Air Source Vertical Package**

A — A = R410 Refrigerant

• — Nominal Cooling
- 12 = 12,000 BTUH
- 20 = 20,000 BTUH
- 24 = 24,000 BTUH
- 30 = 29,000 BTUH
- 36 = 35,000 BTUH
- 42 = 42,000 BTUH
- 48 = 46,500 BTUH
- 60 = 56,000 BTUH

AC — System Type: Air Conditioner

• — Power Supply
- A = 208/230V,1ø,60Hz
- C = 208/230V,3ø,60Hz
- D = 460V,3ø,60Hz

••• — Electric Heat – kW
- 000 = No Heat
- 036 = 3.6 kW
- 040 = 4 kW
- 050 = 5 kW
- 060 = 6 kW
- 080 = 8 kW
- 090 = 9 kW
- 100 = 10 kW
- 120 = 12 kW
- 150 = 15 kW

M5 — Configuration
- M5 = PC Board & Square Cornered Cabinet

• — Ventilation Code
- N = 0-15% fresh air with manual damper, no pressure relief) All Models
- B = Motorized two position damper (open & closed) capable of 0 to 450 cfm (up to 40% of rated air flow) of outside air, includes pressure relief) Models AVPA30-60 only
- Z = Manual damper, field adjustable with pressure relief
- Y = Manual damper, field adjustable, no pressure relief

• — Special Option Code
- U = Scroll Compressor
- A1 = PC Board
- K = Coastal Environmental Package
- R = Electric Reheat

• — A5 = Built in compliance with UL 1995, 4th edition

••• — Brand Designation
- Unused = Marvair ModPac
- EUB = Eubank WalPac

••• — Color Code
- 800 = Mesa Tan
- 200 = Grey
- 400 = White

1.3 Serial Number Date Code

A = January	E = May	J = September	D = 2014	H = 2018
B = February	F = June	K = October	E = 2015	I = 2019
C = March	G = July	L = November	F = 2016	J = 2020
D = April	H = August	M = December	G = 2017	K = 2021

1.4 General Operation

Refrigerant Cycle (Cooling Mode)

The ModPac uses R-410A refrigerant in a conventional vapor-compression refrigeration cycle to transfer heat from air in an enclosed space to the outside. A double blower assembly blows indoor air across the evaporator. Liquid refrigerant passing through the evaporator is boiled into gas by heat removed from the air. The warmed refrigerant gas enters the compressor where its temperature and pressure are increased. The hot refrigerant gas condenses to liquid as heat is transferred to outdoor air blown across the condenser by the condenser fan. Liquid refrigerant is metered into the evaporator through capillary tubes to repeat the cycle.

Heating Mode

A wall-mounted thermostat controls the heating cycle of models which incorporate resistance heating elements. On a call for heat, the thermostat closes the heat relay to energize the indoor fan and the resistance elements. Please see Appendix A for instructions on field installing electric heaters.

Ventilation Options

- Manual damper capable of up to 15% of rated airflow of outside air; field adjustable, no pressure relief. (Standard - Ventilation Configuration N)
- Motorized, two position damper (open and closed) capable of 0 to 450 cfm (maximum of 40% of rated airflow) of outside air; includes pressure relief. A 24-volt actuated motor controls the damper from an external input such as: a time clock, CO2 sensor, energy management system or manual switch. (Optional - Ventilation Configuration B) - AVPA20-60 only.
- Field adjustable manual damper capable of up to 450 cfm (maximum 40% of rated airflow) of outside air; includes pressure relief. (Ventilation Configuration Z) – AVPA20-60 only.
- Field adjustable manual damper capable of up to 450 cfm (maximum 40% of rated airflow) of outside air. Does not include pressure relief. (Ventilation Configuration Y) – AVPA20-60 only.

1.5 M5 Configuration

The M5 configuration of the ModPac conditioners include a factory installed PC board.

The internal control board in the M5 configuration simplifies wiring, consolidates several of the electrical functions onto one device and improves the reliability of the air conditioner. In addition, the control board has LED's that indicate operational status and fault conditions.

1.6 A2 Internal Disconnect

To meet the current U.L. 1995 Safety Standard, the electric heating elements are installed on a separate electrical circuit. Single phase, 240 volt electric heating elements which exceed 48 amps (12 and 15 kW) require two electrical circuits.

1.7 Electronic Control Board Modes of Operation

Normal

24 VAC power must be continuously applied to "R" and "C". Upon a call for cooling "Y" and with the high pressure switch (HPS) closed, the compressor will be energized. (Note: See the delay on make feature.) The compressor will remain energized during the 3 minute timed low pressure by-pass cycle. If the low pressure switch (LPS) is open after the 3 minute by-pass cycle, the compressor will de-energize.

Lock-out

If either of the fault conditions (LPS or HPS) occurs twice during the same call for cooling, the control board will enter into and indicate the lockout mode. In the lockout mode, the compressor is turned off. If there is a call for indoor air flow "G", the blower remains energized, the alarm output is energized and the status LED will blink to indicate which fault has occurred. When the lockout condition is cleared, the unit will reset if the demand for the thermostat is removed or when the power is reset. With the control board, the user can now have either normally closed or normally open contacts by moving a wire on the control board. ComPac air conditioners are factory wired to be normally open.

Delay on Break

If the compressor is de-energized due to a loss of a cooling "Y" call or the first fault, the unit re-start will be delayed 3 minutes from the time the contactor is de-energized. (Note: There is no delay on break if the lockout condition is reset.)

Delay on Make

On initial power up only, the unit will wait 0.03 to 10 minutes from the cooling "Y" call before allowing the contactor to energize. The delay can be adjusted by the DOM wheel on the board. Factory recommended wait is 3 minutes.

Low Pressure By-Pass Time

When starting, the low pressure switch (LPS) fault condition will be by-passed for 3 minutes before the contactor is de-energized.

Post Purge

Upon a call for indoor airflow "G" the blower will energize immediately. When in the cooling mode, the blower will remain energized for 10 to 90 seconds (adjustable) after the compressor has been de-energized. The time period can be changed by fan purge wheel on the board. Factory setting is 90 seconds.

LED Indicator Lights

COLOR	TYPE	STATUS	DESCRIPTION
Green	Power	Contstant On	24 VAC power has been applied
Red	Status	Contstant On	Normal operation
Red	Status	1 Blink	High pressure switch has opened twice
Red	Status	2 Blinks	Low pressure switch has opened twice

High Pressure Switch

The high pressure switch is mounted on the compressor liquid line. It is electrically connected to a lockout relay which shuts down the system if the refrigerant pressure rises to 650 PSIG. This protects the unit if airflow through the condenser is blocked or if the outdoor fan motor fails. Although the contacts of the high pressure switch close when the refrigerant pressure falls to approximately 450 PSIG, the system must be manually reset once the lockout relay is activated. A manual reset is necessary to prevent harmful short-cycling. To reset switch, turn primary power off, then back on or turn thermostat system switch off, then back on.

Low Pressure Switch

The low pressure switch is mounted on the compressor suction line. It is designed to open if the refrigerant pressure drops to 40 PSIG; it resets when the pressure rises to 60 PSIG. The switch protects the unit if airflow through the indoor blower is impeded, if the blower motor fails, or if there is a loss of refrigerant.

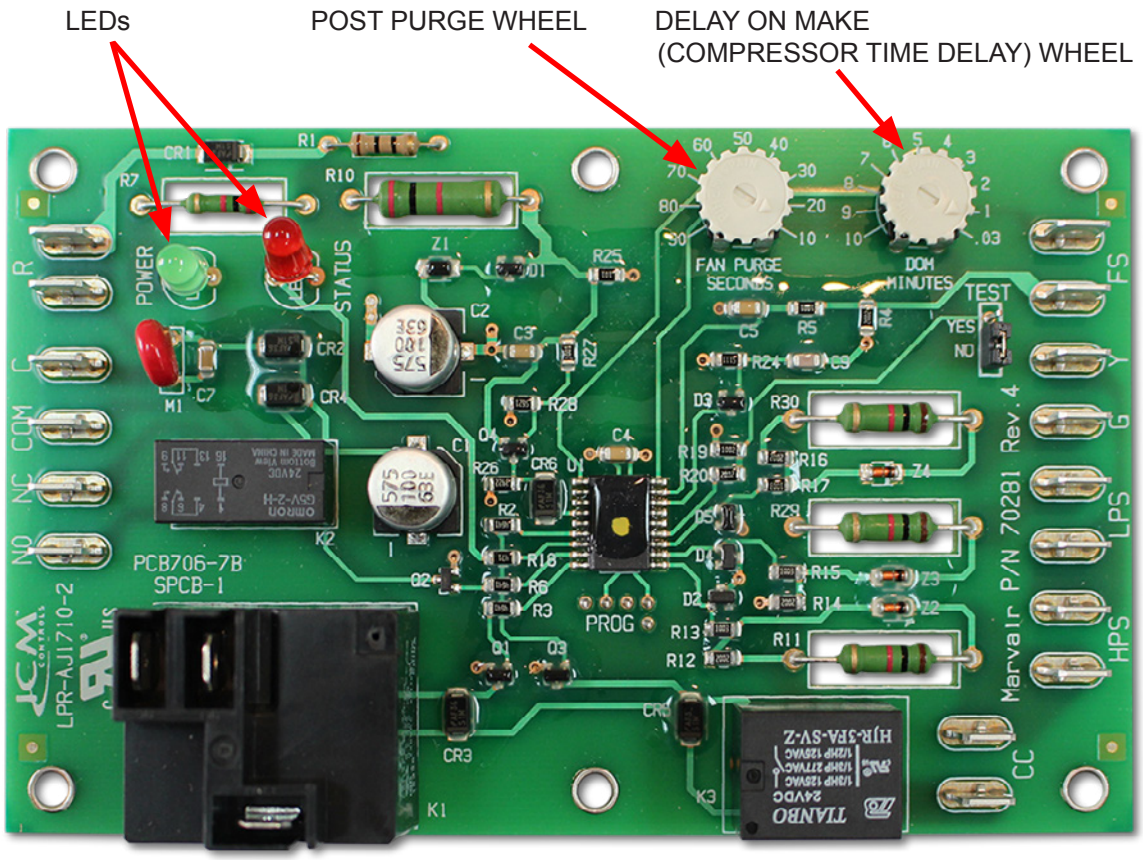

1.8 Electrical Diagrams

The compressor incorporates an internal PTC crankcase heater that functions as long as primary power is available. The heater drives liquid refrigerant from the crankcase and prevents loss of lubrication caused by oil dilution. Power must be applied to the unit for 24 hours before starting the compressor. The compressor is energized with a contactor controlled by a 24 VAC pilot signal (see Figure 1). The evaporator blower motor is cycled by the blower time delay relay.

⚠ IMPORTANT

The ModPac incorporates a 90 second purge cycle that runs the evaporator blower after the thermostat is satisfied.

To meet the current U.L. 1995 Safety Standard, the electric heating elements are installed on a separate electrical circuit. Single phase, 240 volt electric heating elements which exceed 48 amps (12 and 15 kW) require two electrical circuits. The compressor and all other motors are on separate electrical circuit which do not contain any electrical heating elements. The incoming power for units without electric heat can be wired directly to the unit mounted circuit breaker. The incoming power for units with electric heat can be wired to the unit mounted terminal block. The external or wall mounted breaker must be sized for the load of the unit's electrical circuit(s). The required minimum circuit ampacity (MCA)and maximum fuse size (MFS) for this breaker will be marked on the unit's Data Info in the single point power entry (SPPE) column.

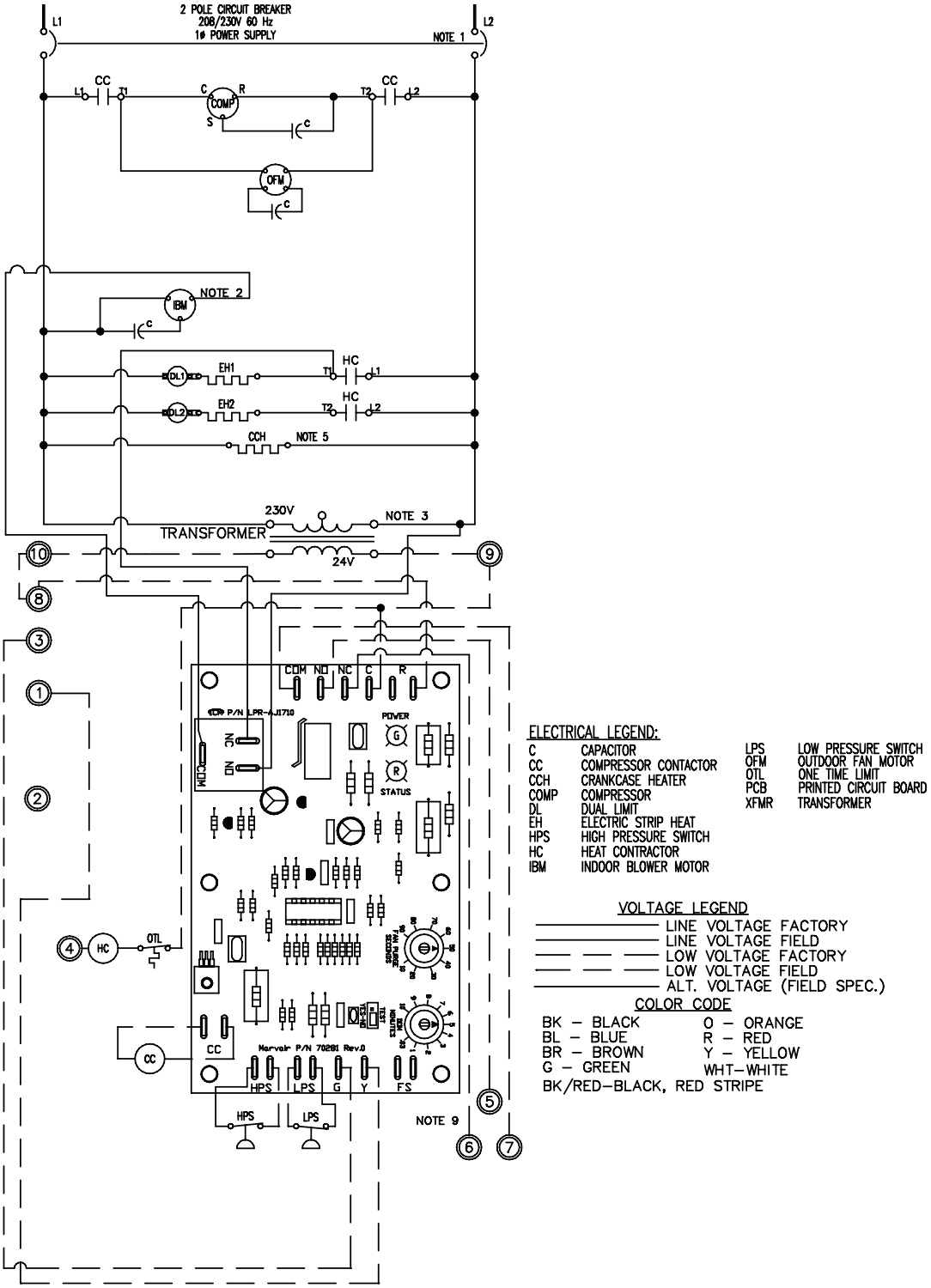

GENERAL NOTES:

1. 208/230 VOLT 60 Hz 1ø POWER SUPPLY. SEE DATA PLATE FOR AMPACITY & FUSE SIZE. OPTIONAL CKT BKR SHOWN.
2. SPEED TAP – SEE MOTOR NAMEPLATE FOR WIRE COLOR.
3. TRANSFORMER IS FACTORY WIRED FOR 230 VOLT OPERATION. FOR LOWER VOLTAGES, INTERCHANGE ORANGE AND RED LEADS. INSULATE UNUSED LEADS.
4. ALTERNATE DEVICE IS NOT ADJUSTABLE AND HAS ORANGE LEADS. (OPTIONAL)
5. CRANKCASE HEATER MAY NOT BE REQUIRED ON ALL COMPRESSORS.
6. PTCR IS NOT REQUIRED ON ALL COMPRESSORS.
7. COMPRESSOR TIME DELAY AND FAN PURGE DELAY ARE LOCATED ON THE PCB (PRINTED CIRCUIT BOARD) AND ARE ADJUSTABLE.
8. THE (STATUS LED) WILL BLINK ONE TIME AFTER THE HPS (HIGH PRESSURE SWITCH) HAS OPENED TWICE AND THE UNIT WILL LOCKOUT. THE (STATUS LED) WILL BLINK TWICE AFTER THE LPS (LOW PRESSURE SWITCH) HAS OPENED TWICE AND THE UNIT WILL LOCKOUT.
9. THE LOCKOUT CIRCUIT CONTACTS ARE N.O. BETWEEN TERMINALS 5 AND 7 OF THE LOW VOLTAGE TERMINAL BOARD AND N.C. BETWEEN TERMINALS 7 AND 6 OF THE LOW VOLTAGE TERMINAL BOARD.

Figure 1. Typical Electrical Schematic for Air Conditioners with the PC Board

Chapter 2. Installation

⚠ WARNING

Failure to observe and follow Warnings and Cautions and these Instructions could result in death, bodily injury or property damage. Read this manual and follow its instructions and adhere to all Cautions and Warnings in the manual and on the unit.

2.1 Equipment Inspection

Concealed Damage

Inspect all cartons and packages upon receipt for damage in transit. Remove cartons and check for concealed damage. **Important: keep the unit upright at all times.** Remove access panels and examine component parts. (Note: the bottom bracket for Models AVPA20-60 are stored in the condenser air compartment. Remove a side screen to retrieve them and then replace the side screen). The AVP12 does not require a bottom bracket. Inspect refrigerant circuit for fractures or breaks. The presence of refrigerant oil usually indicates a rupture. If damage is apparent, immediately file a claim with the freight carrier.

Units that have been turned on their sides or tops may have concealed damage to compressor motor mounts or to the oil system. If the unit is not upright, immediately file a claim for concealed damages and follow these steps:

1. Set unit upright and allow to stand for 24 hours with primary power turned on.
2. Attempt to start the compressor after 24 hours.
3. If the compressor will not start, makes excessive noise, or will not pump, return the unit to the freight carrier.

2.2 Installation Requirements

General

1. Inspect unit for completeness. Check for missing parts (e.g. hardware). Refer to the installation kit information in section 2.3.
2. Remove access panels and check for loose wires. Tighten screw connections if necessary.
3. Complete and mail the warranty registration card.

You must consider all of the following when choosing the installation site:

1. **Noise:** Install the unit so that the least amount of noise will be transmitted to inhabited spaces.
2. **Condensate Drainage:** Condensate produced during operation must be discharged to a suitable drain.
3. **Placement:**
   A) Place the unit in a shaded area, if possible.
   B) Install it above ground for protection against flooding.
   C) The unit exhausts air. Be sure that the airflow is not impeded by shrubbery or other obstructions.
4. **Airflow Requirements:** Note the minimum CFM requirements (section 2.4). Keep duct lengths as short as possible. Do not obstruct airflow through the unit.

   Applications using duct work should be designed and installed in accordance with *all* applicable safety

codes and standards. Airxcel Commercial Group strongly recommends referring to the current edition of the National Fire Protection Association Standards 90A and 90B *before* designing and installing duct work. The duct system must be engineered to insure sufficient air flow through the unit to prevent over-heating of the heater element. This includes proper supply duct sizing, sufficient quantity of supply registers, and adequate return and filter areas. Duct work must be of correct material and must be properly insulated. Duct work must be constructed of galvanized steel with a minimum thickness of .019". Duct work must be firmly attached, secured, and sealed to prevent air leakage. See section 2.4 for additional duct work requirements.

5. **Clearances:** Note the minimum clearances required for proper operation and service.

MODEL	MIN. CLEARANCE AROUND SIDES (SINGLE UNIT)	MIN. CLEARANCE BETWEEN UNITS (TWO UNITS)	MIN. SPACE ABOVE UNIT
12	24 inches (76 cm)	18 inches (46 cm)	24 inches (61 cm)
20/24	30 inches (76 cm)	18 inches (46 cm)	24 inches (61 cm)
30/36	30 inches (76 cm)	18 inches (46 cm)	24 inches (61 cm)
42/48/60	30 inches (76 cm)	30 inches (76 cm)	24 inches (61 cm)

Table 1. Minimum Clearances

6. **Codes:** Make sure your installation conforms to all applicable electrical, plumbing, building, and municipal codes. Some codes may limit installation to single story structures.

7. **Electrical Supply:** The power supply must have the appropriate voltage, phase, and ampacity for the model selected. Voltage must be maintained above minimum specified values listed below. Refer to the data sticker on the unit for ampacity requirements.

ELECTRICAL RATING DESIGNATIONS*	A	C	D
Nominal Voltage	208/230	208/230	460
Phase and Hertz	1/60	3/60	3/60
Minimum Voltage	197	187	414
Maximum Voltage	253	253	506
*Letters refer to the system electrical rating in the model number identification. Refer to page 5.			

Table 2. Voltage Limitations

8. **Ventilation System Set-Up:**

Manual Fresh Air System (Configuration N). This is the standard ventilation system in the ModPac air conditioner. Fresh air ventilation by means of a damper can provide up to 15% of rated air flow of outside air. The damper has four positions corresponding to 0, 5, 10 and 15% of rated air flow of outside air. See Figures 3a and 3b.

The damper only opens when the indoor fan is operating. Position the screw on the side of the damper hood for the desired air flow. Note: the damper on the AVPA12 stays is the same position, regardless of the operation of the blower.

Motorized Damper - 0 to 450 cfm of Outside Air and Pressure Relief (Configuration B) and manual dampers, Configurations Z & Y. *Note:* When setting the manual damper with Configuration Y, a pathway for the classroom air to exit the room must be provided when setting the damper position. - Not available on the AVPA12. The settings of the damper require a balometer and a thermometer for measuring internal and external temperatures.

a. Measure the total supply air with a balometer. If the supply air is controlled by a manual fan speed controller, make certain that the air flow is in accordance with Table 3, Air Flow (CFM) at Various Static Pressures. This CFM is referred to as "C" in the illustration and equation below.

b. "A" is the quantity of outside air expressed as a percentage of "C". For example, if the supply air is 1,220 CFM and 300 CFM of outside air is required, "A" is 25% (300 CFM/1,220 CFM)

Measure the temperature of the outside air.

Multiply the temperature by "A".

c. "B" is the quantity of return air expressed as a percentage of "C". "A" and "B" must equal 100%.

Measure the temperature of the indoor return air.

Multiply the temperature of the indoor air by "B".

d. Calculate what the Tmix should be with the desired quantity of outside air.

Measure the actual temperature of Tmix at the inlet to the supply air blower.

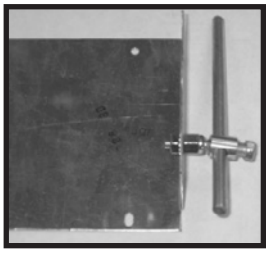

Adjust the damper blade until the measured value of the Tmix equals the calculated or desired value of Tmix. To adjust the damper, loosen the set screw on the damper rod and move the rod as required. When the adjustment is complete, tighten the set screw.

The motorized damper, Configuration B, can be controlled by an optional relay that allows additional external control with a choice of 24, 120 or 240V coils to regulate fresh air ventilation in response to a control located remote from the air conditioner.

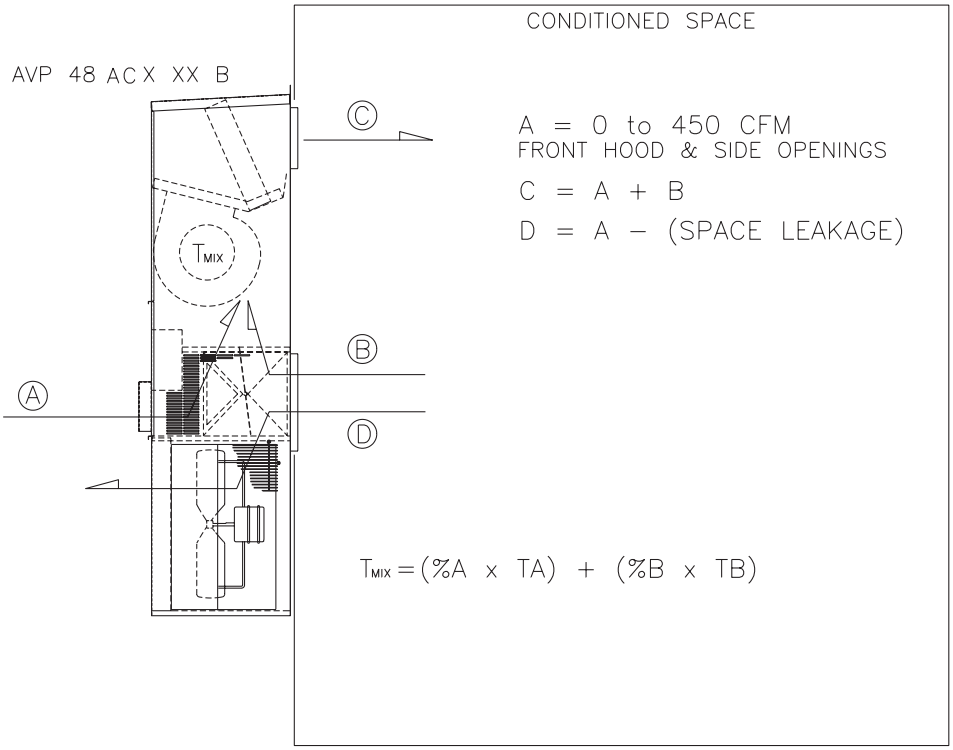

Figure 2. Damper Air Path

2.3 Installation Materials

Installation Kits

All ModPac units have built-in side flanges that function as side brackets. All models, except for the AVPA12, require and are shipped with a bottom mounting bracket. There is also an air intake hood factory installed behind the lower front panel.

Standard Kit Components - Models AVPA20-60:

1. One 12 Ga. "L"-shaped bottom bracket (The AVPA12 does not require a bottom bracket.)

Accessories:

The package may include other factory-supplied items (optional) as follows:

Part #	Description
50121	Digital thermostat. 1 stage heat, 1 stage cool. Non-programmable. Fan switch: Auto & On. Manual changeover system switch: Cool-Off-Heat. Low temperature protection. °F or °C.
50123	Digital thermostat. 1 stage heat, 1 stage cool. 7 day programmable. Fan switch: Auto & On. Auto-change over. Keypad lockout. Non-volatile program memory.
50254	Digital dehumidistat. Required for units with electric reheat. ***Note:*** a humidistat should not be used.

Supply Grilles:

80682	17" x 5" Aluminum, Adjustable Double Deflection Supply Grille for the AVPA12
80674	VPG-20S, 20 x 8" Adjustable, Aluminum Double Deflection Supply Grille for AVPA 20-24
80675	VPG-30S, 28 x 8" Adjustable, Aluminum, Double Deflection Supply Grille for AVPA 30-36
80676	VPG -40S, 30 x 10" Adjustable, Aluminum, Double Deflection Supply Grille for AVPA42-48-60

Return Grilles:

92352	17" x 10" Aluminum Return Grille for the AVPA12
80677	VPG -20R, 20 x 12" Aluminum Return Grille for AVPA 20-24
80678	VPG -30R, 28 x 14" Aluminum Return Grille for AVPA 30-36
80679	VPG -40R, 30 x 16" Aluminum Return Grille for AVPA 42-48-60

Return Filter Grilles:

80683	17" x 10" Aluminum, Return Air Filter Grille for the AVPA12
80671*	VPG -20RF, 20 x 12" Aluminum Return Filter Grille for AVPA 20-24
80672*	VPG -30RF, 28 x 14" Aluminum Return Filter Grille for AVPA 30-36
80673*	VPG -40RF, 30 x 16" Aluminum Return Filter Grille for AVPA 42-48-60

*Use when outside air is not required. Remove and discard filter in unit.

Additional Items Needed:

Additional hardware and miscellaneous supplies (not furnished) are needed for installation. For example, the list below contains approximate quantities of items typically needed for mounting a unit on a wood frame wall structure. Concrete or fiberglass structures have different requirements.

10 **3/8" mounting bolts** for side brackets. The length needed is typically the wall thickness plus one inch.

20 **3/8" washers**

10 **3/8" hex nuts**

6 **3/8" x 2-1/2" lag screws** for bottom bracket

- **Silicone Sealer** to seal around cracks and openings
- **4-conductor low voltage multi-colored wire cable** (i.e. thermostat wire)
- **Appropriate electrical supplies** such as **conduit, electrical boxes, fittings, wire connectors,** etc.
- **High voltage wire**, sized to handle the MCA (minimum circuit ampacity) listed on the data plate.

- **Over-Current Protection Device** sized in accordance with the MFS (maximum fuse size) listed on the unit data plate.

  Duct materials usually are also needed in addition to the mounting hardware. To save time, design the duct work before mounting the unit.

⚠ WARNING
FIRE HAZARD

Improper adjustment, alteration, service, maintenance or installation could cause serious injury, death and/or property damage.

Installation or repairs made by unqualified persons could result in hazards to you and others. Installation MUST conform with local codes or, in the absence of local codes, with codes of all governmental authorities have jurisdiction.

The information contained in this manual is intended for use by a qualified service agency that is experienced in such work, is familiar with all precautions and safety procedures required in such work, and is equipped with the proper tools and test instruments.

2.4 Porting and Duct Work

General Information

Note: The following instructions are for general guidance only. Due to the wide variety of installation possibilities, specific instructions will not be given. When in doubt, follow standard and accepted installation practices, or contact Airxcel Commercial Group for additional assistance.

Wall Openings and Duct Clearance

Measure the dimensions of the supply and return openings on the air conditioner .

⚠ WARNING

Cut the supply opening in the exterior wall for the supply and return. IMPORTANT: All units must have one inch clearance on all four sides of the supply outlet duct flange on the unit. The one inch clearance must extend on all sides of the supply duct for the first three feet from the unit.

Minimum Airflow Requirements

⚠ WARNING

The duct system must be engineered to assure sufficient air flow through the unit, even under adverse conditions such as dirty filters, etc. Use Table 2 below and Table 3 - CFM at External Static Pressure (Wet Coil) in section 5.1.

Ducting

Extensions should be cut flush with the inside wall for applications without duct work.

Applications using duct work should be designed and installed in accordance with the current edition of the National Fire Protection Association codes and standards 90A and 90B. The duct system must be engineered to insure sufficient air flow through the unit to prevent over-heating of the heater element. This includes proper supply duct sizing, sufficient quantity of supply registers, adequate return and filter area. Duct work must be of correct material and must be properly insulated. Duct must be constructed of galvanized steel with a minimum thickness of .019" for the first three feet. Duct work must be firmly attached, secured and sealed to prevent air leakage. Do not use duct liner on inside of supply duct within four feet of the unit.

Galvanized metal duct extensions should be used to simplify connections to duct work and grilles. Use fabric boots to prevent the transmission of vibration through the duct system. The fabric must be U.L. rated (UL-181) to a minimum of 197ºF.

Note: Follow local codes and standards when designing duct runs to deliver the required airflow. Minimize noise and excessive pressure drops caused by duct aspect ratio changes, bends, dampers and outlet grilles in duct runs.

Basic Model	Maximum Total Static	Minimum Filter Area
12	.25	2.25 sq. ft.
24	.40	2.25 sq. ft.
30/36	.40	3.00 sq. ft.
42/48/60	.50	3.90 sq. ft.

Table 3. Maximum Static Pressure

2.5 Fresh Air Hood Installation

The fresh air hood is located on the inside, behind the slots on the bottom front panel. To access the hood, remove the screws that hold the front panel. The air flow can be adjusted from no (0%) fresh air to approximately 15% of rated air flow of fresh air, in 5% increments. The hood is shipped from the factory in the closed position (no fresh air). To provide fresh air, remove the two screws on either side of the hood and reposition as desired.

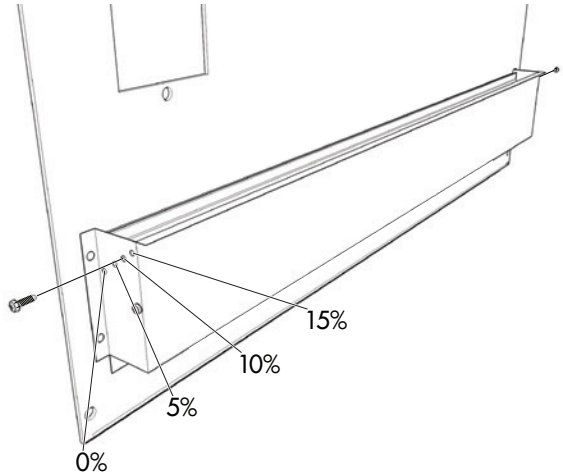

Figure 3a. Fresh Air Hood Damper for AVPA20-60

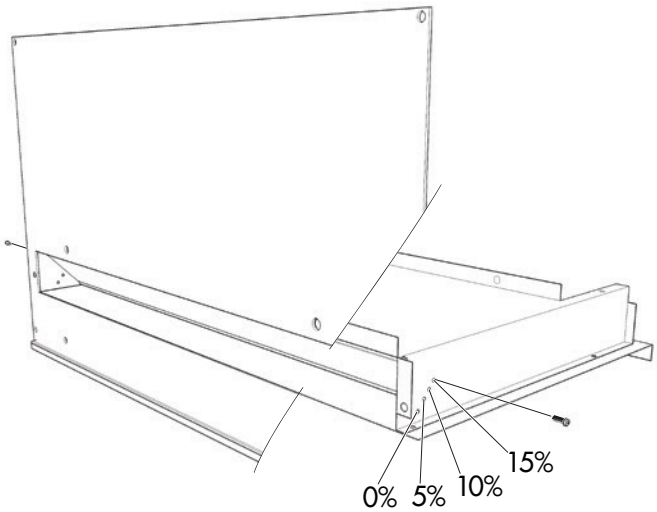

Figure 3b. Fresh Air Hood Damper for AVPA12

2.6 Bottom Bracket Installation

1. The ModPac air conditioners have built-in mounting flanges. See Figure 4.
2. Refer to Figure 4. Attach the bottom support bracket to the wall using appropriate 3/8" diameter hardware. Note: The AVPA12 does not require a bottom bracket.

For example, on wooden structures, use 3/8 x 2-1/2 inch all-thread lag screws. The screws must penetrate the center of the wall stud. Drill a pilot hole in the stud to prevent it from splitting.

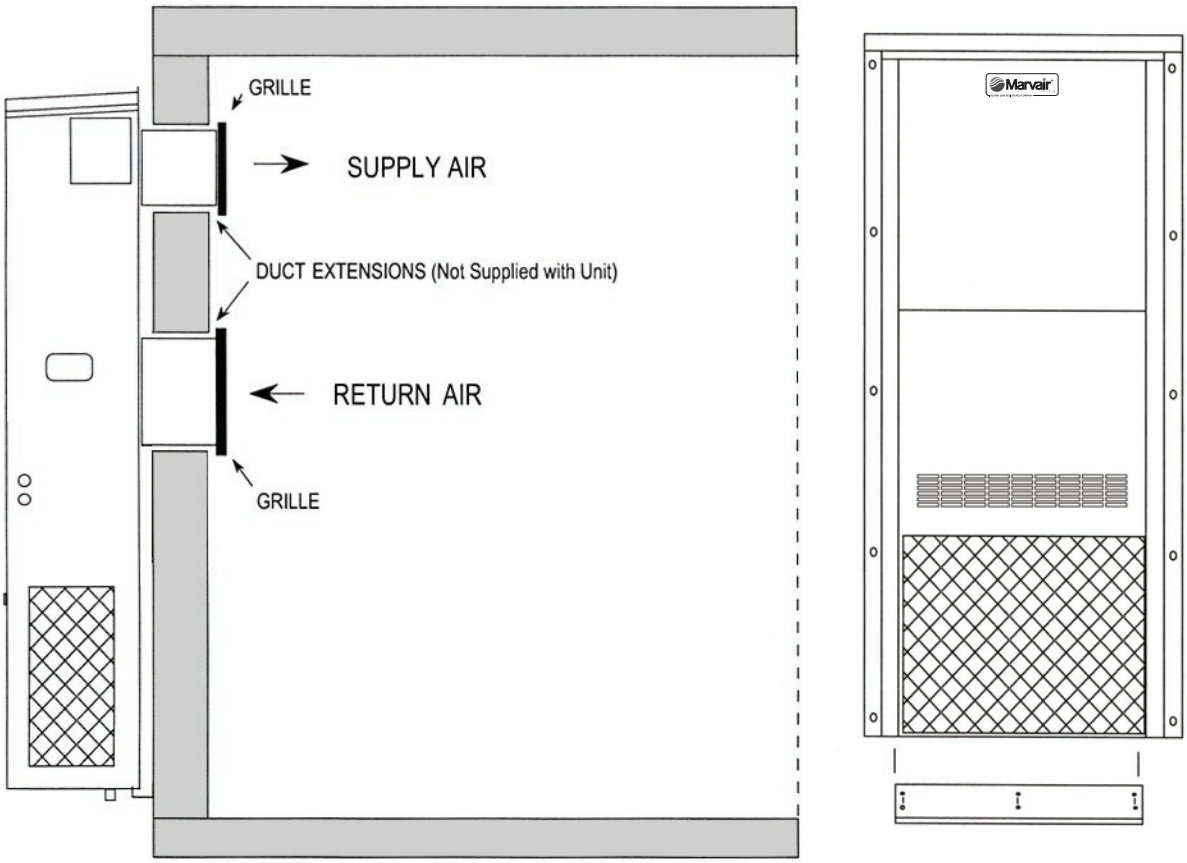

For units with electric heat, a one inch clearance is required around the duct extensions. The duct extensions must be constructed of galvanized steel with a minimum thickness of .019" as per the NFPA standards 90A & 90B.

Figure 4. Wall Mounting Detail - Models AVPA12-60

2.7 Mounting the Unit

1. For wiring into the back of unit, locate the lower of the two knock-outs on the wall side of the unit. Drill a one inch hole in the shelter wall to match this opening. Allow sufficient clearance to run 3/4" conduit through the hole and to the unit.
2. Apply a generous bead of silicone sealer on the wall side of the mounting brackets on the unit. Circle the mounting holes with the silicone bead.
3. Using an appropriate and safe lifting device, set the unit on the bottom support bracket mounted on the wall. You must stabilize the unit on the bracket with the lifting device or by some other means - the bracket alone is not sufficient. The AVPA12 does not require a bracket.
4. Make sure that the duct flanges are properly aligned with the wall opening. Adjust as necessary.
5. Note the holes in each side bracket. Using the holes for guides, drill holes through the wall with a 3/8" drill bit. Insert the 3/8 x 5" bolts through the brackets. Install nuts and washers on the inside of the building. Tighten the bolts to secure the unit.
6. Apply a bead of silicone where the flashing and side brackets contact the unit and the building wall.
7. Fasten the flashing to the unit casing and the building wall using #10 x 1/2 inch sheet metal screws.

8. On the inside of the building, install the wall sleeves in the supply and return air openings. The sleeves may be trimmed to fit flush with the inside wall. For units with electric heat, a one inch clearance is required around the duct extensions. The duct extensions must be constructed of galvanized steel with a minimum thickness of .019” as per the NFPA standards 90A & 90B.

9. Check the fit of each sleeve to its mating flange for possible air leaks. Apply silicone sealer to close any gaps. Install the air return and supply grilles.

⚠ WARNING
ELECTRICAL SHOCK HAZARD

Failure to follow safety warnings exactly could result in serious injury, death, and/or property damage.

Turn off electrical power at fuse box or service panel BEFORE making any electrical connections and ensure a proper ground connection is made before connecting line voltage.

2.8 Electrical Connections

IMPORTANT!

All electrical work must meet the requirements of local codes and ordinances. Work should be done **only** by qualified persons.

⚠ CAUTION

These air conditioners incorporate an internal crankcase heater for compressor protection. The crankcase heater must be energized for at least 24 hours prior to starting the compressor.

ModPac air conditioners may be ordered with a scroll compressor. Scroll compressors, like several other types of compressors, will only compress in one rotational direction. The direction of rotation is not an issue with single-phase compressors since they will always start and run in the proper direction. However, three phase compressors will rotate in either direction depending upon phasing of power. Since there is a 50-50 chance of connecting power in such a way as to cause rotation in the reverse direction, it is imperative to confirm that the compressor is rotating in the proper direction at the initial field start-up of the system. Verification of proper rotation is made by observing that the suction pressure drops and the discharge pressure rises when the compressor is energized. An alternate method of verification for self contained system with small critical refrigerant charges, where the installation of gauges may be objectionable, can be made by monitoring the temperature of the refrigerant lines at the compressor. The temperature should rise on the discharge line while the suction line temperature decreases. Reverse rotation also results in a substantially reduced current draw when compared to tabulated values.

There is no negative impact on durability caused by operating three phase compressors in the reversed direction for a short duration of time, usually defined as less than one hour. However, after several minutes of operation the compressor's internal protector will trip. The compressor will then cycle on the protector until the phasing is corrected. Reverse operation for longer than one hour may have a negative impact on the bearings. **Failure to ensure proper rotation will void the warranty of the compressor.**

To change the rotation, turn off power to the unit and swap L1 and L2 at the disconnect or circuit breaker.

High Voltage Wiring

The power supply should have the proper voltage, phase, and ampacity for the selected model.

1. Refer to the electrical data on the data sticker on the unit for field wiring requirements of the unit. Size the incoming power supply lines and the fuse(s) or HACR breaker(s) according to requirements described in the National Electric Code. Run the power conductors through the knockouts on the side or back of the unit. Use appropriate conduit and strain reliefs.

⚠ CAUTION

CAUTION! This system contains components that require phasing for correct rotation. Failure to observe rotation and correct on start-up will cause damage not covered by the Airxcel Commercial Group Limited Product Warranty.

2. Connect the wires to the input side of the internal breaker (L1 & L2 for single-phase units; L1, L2, & L3 for three phase models).

⚠ CAUTION

Note: Power supply service must be within allowable range (+10% - 5%) of rated voltage stamped on the unit rating plate. To operate nominal 230/208V unit at 208V, change the transformer line tap from 240V to 208V following the instruction on wiring label in unit.

3. Install the ground wire on the ground lug.
4. Units designed to operate on 460V have a step down transformer for 230V motors.

Low Voltage Wiring

1. Pull the low voltage wiring (e.g., Class 2 thermostat wire) from the air conditioner into the thermostat / sub-base assembly.
2. Mount the sub-base on a level plane. Use a spirit level. Connect the thermostat wire to the terminal board and the thermostat as shown in Figure 6.
3. Attach the thermostat assembly to the sub-base. Check the heat anticipator settings - it should read .40.

THE INTERNAL TRANSFORMER IS NOT DESIGNED TO POWER OTHER EXTERNAL DEVICES.

SIMPLE COMFORT THERMOSTAT CONNECTION DIAGRAM

for Marvair Heat Pumps and Air Conditioners (without hot gas reheat or electric heat)

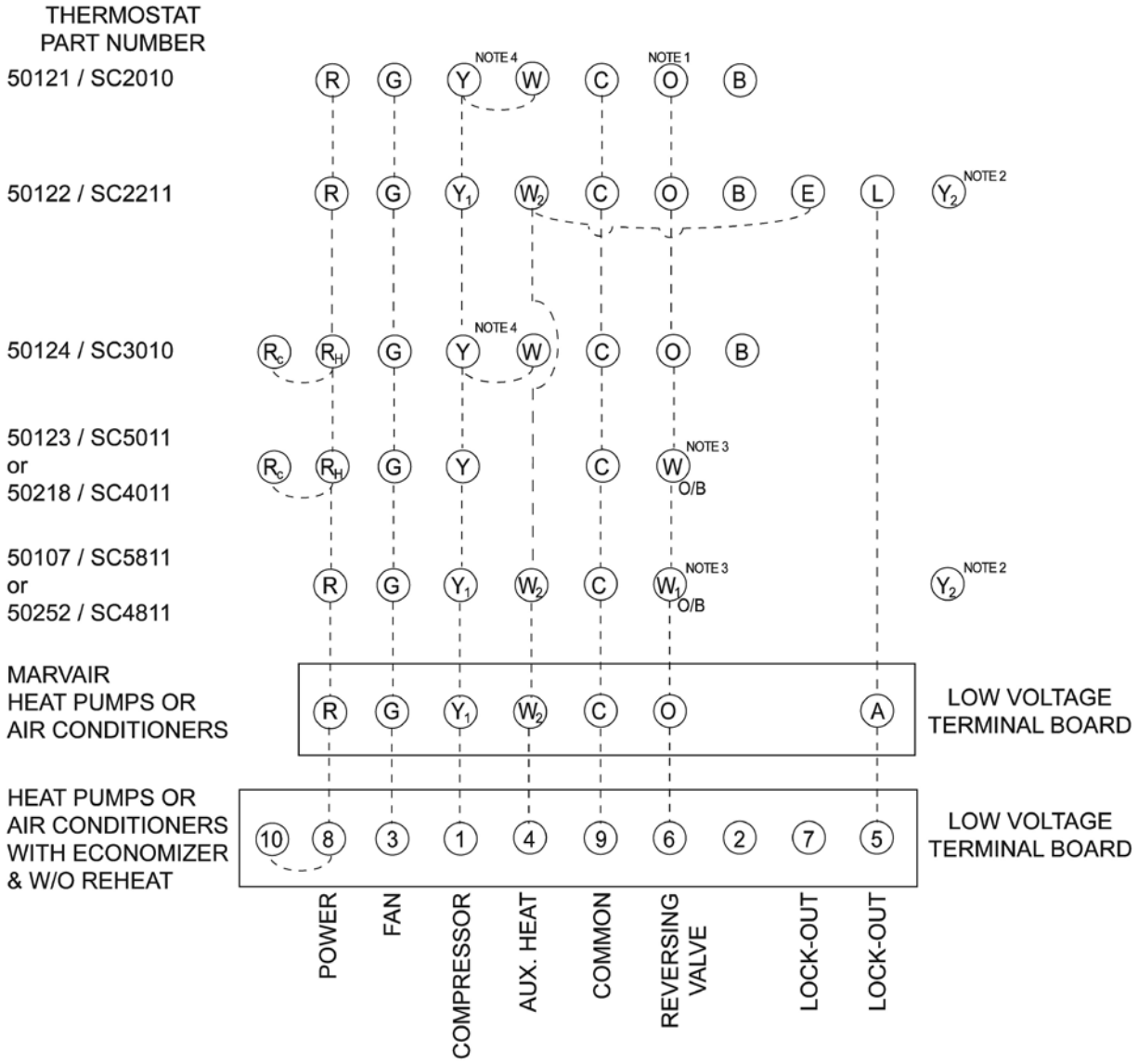

NOTES:

1. Reversing valve on heat pumps only.
2. For units with 2-stage compressors, connect lead from the compressor monitor and diagnostic module, e.g., Copeland's Comfort Alert, to Y_2
3. For air conditioners with strip heat, connect W/O/B to terminal W or 4.
4. Jumper for heat pump only, omit with air conditioners.

A. Terminals 5 & 7 are normally open dry contacts and close to indicate lockout.
B. Terminals 6 & 7 are normally closed dry contacts and open to indicate lockout.
C. If the thermostat has RC & RH terminals, install a jumper wire between RC & RH.
D. IMPORTANT. The instructions are generic wiring instructions and may not be applicable for air conditioners with various options. Always refer to the wiring diagram in the air conditioner for the proper method to wire your unit.

Figure 5. Thermostat Connection Diagram

Chapter 3. Start-Up

⚠ IMPORTANT

If your unit has a crankcase heater be sure that the crankcase heater has been energized for at least 24 hours prior to start-up of the unit. Double check all electrical connections before applying power. Various thermostats can be used to control the air conditioner. The thermostat may have a fan switch with an Automatic and On positions, a system switch with Heat, Cool, and Off positions. The product data sheets have detailed description of the various Marvair thermostats. Since other thermostats or remote control systems may be used, the following procedures should be viewed as guidelines for standard thermostats with system and fan switches.

3.1 Check-Out of Cooling Cycle

Procedure:

1. Set the cooling temperature set point on the wall thermostat to a point higher than the ambient temperature. Set the heating temperature set point to a temperature that is lower than the ambient.
2. Set the thermostat system switch in the AUTO position. Nothing should operate at this time.
3. For units with the PC board, set the time delay in the control box to 3 minutes.
4. Slowly lower the thermostat's cooling temperature set point until the switch closes. The indoor fan should operate.

   Once the indoor fan turns on, allow approximately three minutes for the compressor to start. Note that the outdoor fan may not come on immediately, because it is cycled by refrigerant pressures.

⚠ IMPORTANT

Alternately, when outdoor conditions are lower than the set point, a source of heat such as a hair dryer can be directed on the air temperature sensor to simulate warmer conditions, which will bring on mechanical cooling and start the compressor.

5. To stop cooling, slowly raise the thermostat cooling set point to a temperature higher than the ambient.

If the unit fails to operate, refer to the troubleshooting information in Chapter 4.

Follow the same procedure for additional units.

NOTE: Blower Time Delay Relay (BTR) and the Fan Purge mode (PC board units) allows the indoor fan to run for approximately 90 seconds after the compressor is off. This operation provides a small improvement in system efficiency.

3.2 Check-Out of Heating Cycle

Procedure: (Applies only to units with resistance elements.)

1. Raise the heating temperature set point to a setting which is higher than the ambient temperature. The fan and electric heat should immediately cycle on.
2. Move the system switch to the "OFF" position. All functions should stop.

Chapter 4. Troubleshooting

4.1 Overview

A comprehensive understanding of the operation of the ModPac air conditioner is a prerequisite to troubleshooting. Please read the Chapter 1 for basic information about the unit.

Airxcel Commercial Group air conditioners are thoroughly tested before they are shipped from the factory. Of course, it is possible that a defect may escape undetected, or damage may have occurred during transportation. However, the great majority of problems result from installation errors.

If you experience difficulties with the ModPac, please review the installation steps in Chapter 2.

Much time can be saved by taking a thoughtful and orderly approach to troubleshooting. Start with a visual check - are there loose wires, crimped tubing, missing parts, etc.? Begin deeper analysis only after making this initial inspection.

The troubleshooting information in this manual is basic. The troubleshooting section contains problem / solution charts for general problems, followed by a compressor section.

Not every problem can be anticipated. If you discover a problem that is not covered in this manual, we would be very grateful if you would bring it to the attention of our service department for incorporation in future revisions.

As always, please exercise caution and good judgement when servicing the ModPac. Use only safe and proven service techniques. Use safety goggles when servicing the refrigeration circuit.

⚠ WARNING

The refrigerant circuit has hot surfaces, and the electrical voltages inside of the unit may be hazardous or lethal. SERVICE SHOULD BE PERFORMED ONLY BY QUALIFIED AND EXPERIENCED PERSONS.

4.2 Failure Symptoms Guide

PROBLEM/SYMPTOM	LIKELY CAUSE(S)	CORRECTION
A. Unit does not run.	1. Power supply problem.	1. Check power supply for adequate phase and voltage. Check wiring to unit and external breakers or fuses.
	2. Blown fuse or breaker.	2. Check circuit protection devices for continuity.
	3. Shut off by external thermostat or thermostat is defective.	3. Check operation of wall-mounted thermostat.
	4. Internal component or connection failure	4. Check for loose wiring. Check components for failure
B. Unit runs for long periods or continuously; cooling is insufficient.	1. Unit undersized for job.	1. Add additional units for greater capacity.
	2. Loss of refrigerant.	2. Check for proper charge and possible leak.
	3. Component failure.	3. Check internal components, especially compressor for proper operation.
	4. Dirty filter or reduced airflow.	4. Check air filter(s). Check blower operation. Remove airflow restriction.
C. Unit cycles on Compressor Overload	1. Loss or restriction of airflow.	1. Check blower assembly for proper operation. Look for airflow restrictions, e.g., the air filter. Check blower motor and condenser fan.
	2. Restriction in refrigerant circuit.	2. Check for blockage or restriction, especially filter drier and capillary tube assembly.
	3. Refrigerant overcharge (following field service)	3. Evacuate and recharge to factory specifications.
D. Unit blows fuses or trips circuit breaker.	1. Inadequate circuit ampacity.	1. Note electrical requirements in Chapter 2 and correct as necessary.
	2. Short, loose, or improper connection in field wiring.	2. Check field wiring for errors.
	3. Internal short circuit. Loose or improper connection(s) in unit.	3. Check wiring in unit. See wiring and schematic diagrams. Test components (especially the compressor) for shorts.
	4. Excessively high or low supply voltage or phase loss (3ø only).	4. Note voltage range limitations specific to the compressor troubleshooting section.
E. Water on floor near unit or leaking from cabinet.	1. Obstruction in condensate line.	1. Check for clog or restriction.
	2. Obstruction or leak in condensate pan.	2. Check pan for leak or blockage.
	3. Unit is not level.	3. Level unit.
F. No space heating or reduced heating (units equipped with resistance elements)	1. Defective heating element(s).	1. Check resistance element(s) for continuity.
	2. Thermal limit open.	2. Check continuity across thermal limit switch.
	3. Defective heater contactor.	3. Check for proper operation.

4.3 Compressor Troubleshooting

NOTE: It is important to rule out other component failures before condemning the compressor.

The following electrical tests will aid diagnosis:

1. **Start-Up Voltage:** Measure the voltage at the compressor contactor during start-up. The voltage must exceed the minimum shown in Table 4, section 2.2, or compressor failure is likely. A low voltage condition must be corrected.

2. **Running Amperage:** Connect a clamp-on type ammeter to the (common) lead to the compressor. Turn on the supply voltage and energize the unit. The compressor will initially draw high amperage; it should soon drop to the RLA value or less. If the amperage stays high, check the motor winding resistances.

   NOTE: Feel the top of the compressor to see if it has overheated. If it is hot, the internal overload may be open. You may have to wait several hours for it to reset.

3. **Motor Winding Resistances:** Using a digital volt-ohm meter (VOM), measure the resistance across the compressor windings as shown on the following page:

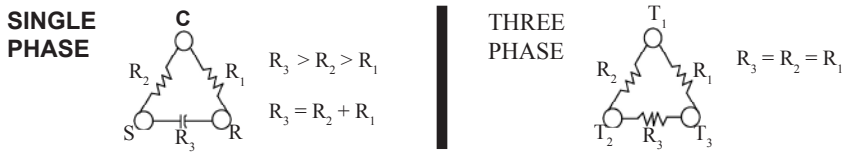

   Resistance can be measured as shown above. Any deviation from above values could indicate a defective compressor.

4. **High Voltage/Insulation Test:** Test internal leakage with a megohmeter. Attach one lead to the compressor case on a bare metal tube and to each compressor terminal to test the motor windings. A short circuit at high voltages indicates a motor defect. Do not do this test under vacuum.

5. On single phase models, check the capacitor by substitution.

4.4 Electric Heat Controls

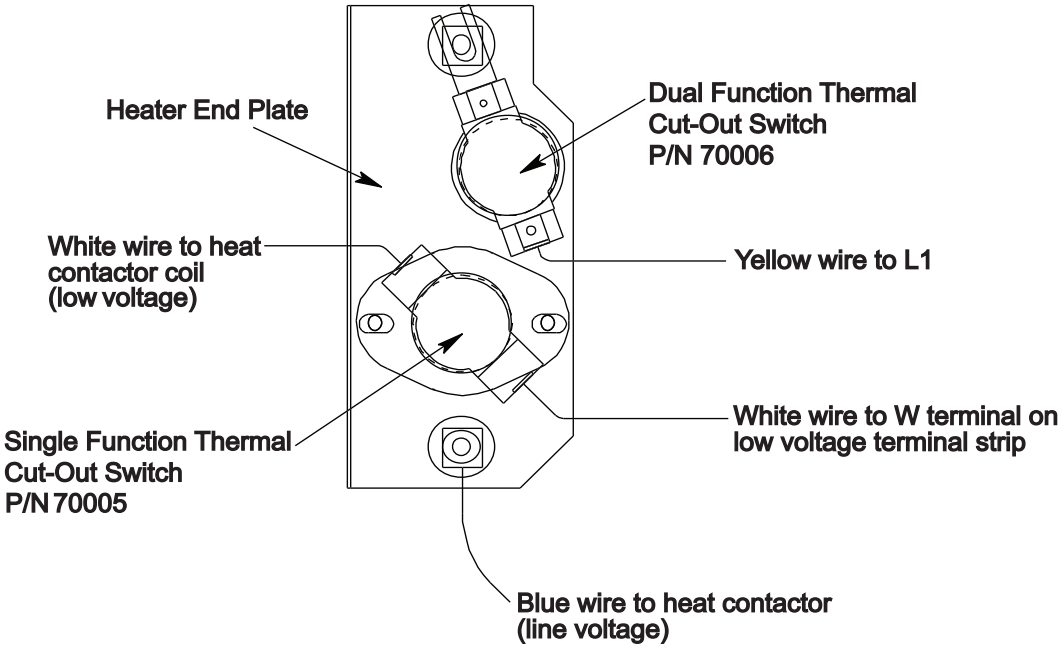

Figure 6. Typical Configuration for Single Element Heater

The electric heater assembly can have up to three individual heating elements. Each individual heating element is protected against overheating by its own dual function thermal cut-out switch. Additionally, a separate single function thermal cut-out switch protects the entire heater assembly.

The dual function thermal cut-out switch (P/N 70006) is composed of two independent line voltage snap-disc temperature switches mounted in a single enclosure. One of these switches is an automatic reset device which cycles off at approximately 145°F and back on at approximately 115°F. Should this switch fail to open, the second switch will open the circuit if the temperature continues to increase. This second switch does not reset. If it opens (breaks the line voltage circuit to the heater assembly) the switch will have to be replaced by qualified service personnel after the source of the overheat problem is resolved.

In addition to the thermal cut-out switch described above, there is a single function thermal cut-out switch (P/N 70005) mounted on the heater frame. This switch controls the 24V AC control current to the heater contactor(s) which powers all the heating elements. This single function thermal cut-out switch operates totally independent of the dual thermal cut-out switch described above. If the single function switch senses an overheat situation, it opens the control circuit and turns off all of the installed heating elements via the heater contactor(s). Because this switch controls the heater contactor(s), only one switch is required to disconnect power from the contactor(s), regardless of the number of heater elements. This single function switch is also non-resettable, and must be replaced by qualified service personnel after the source of the overheat problem is resolved. This switch would typically open if both elements of the dual thermal cut-out switches failed.

Chapter 5. Ratings and Specifications

5.1 Ratings & Specifications

CFM[1] vs. External Static Pressure (Wet Coil)

MODEL	0.10	0.20	0.25	0.3	0.4	0.5
AVPA12	500	460	430	400	n/a	n/a
AVPA20	860	810	740	670	n/a	n/a
AVPA24	860	810	740	670	n/a	n/a
AVPA30	1,100	1,000	960	920	810	n/a
AVPA36	1,310	1,220	1,185	1,150	1,060	n/a
AVPA42	n/a	1,650	1,585	1,520	1,450	1,360
AVPA48	n/a	1,900	1,830	1,760	1,700	1,620
AVPA60	n/a	1,900	1,830	1,760	1,700	1,620
[1]CFM=Cubic Feet per Minute. Air flow ratings are at 230 volts. Operation of units at a different voltage will affect air flow.						

Table 4. CFM @ ESP iwg

Filter Size

MODEL	AVPA12	AVPA20/24	AVPA30/36	AVPA42/48/60
FILTER SIZE (inches)	20 x 10 x 1	25 x 16 x 1	30 x 16 x 1	36½ x 22 x 1
FILTER PART NUMBER	91913	80135	80136	80139

Table 5. Filter Sizes

Ship Weights

Ventilation Configuration	AVPA12		AVPA20-24		AVPA30-36		AVPA42		AVPA48		AVPA60	
	Lbs	Kg	Lbs	Kg	Lbs	Kg	Lbs	Kg	Lbs	Kg	Lbs	Kg
Ventilation Configuration "N", "Z" & "Y"	180	81.8	280	127.27	350	159.09	485	220.45	510	231.82	522	237.27
Ventilation Configuration "B"	N/A	N/A	295	134	365	165.91	527	239.55	552	250.91	565	256.82

Table 6. Shipping Weights

Complete performance, electrical specifications and dimensional drawings can be found in the ModPac air conditioner Product Data Sheet.

Chapter 6. Maintenance

6.1 Scheduled Maintenance

Airxcel Commercial Group strongly recommends that the air conditioner be serviced a minimum of twice a year – once prior to the heating season and once prior to the cooling season. At this time the filters, evaporator coil, condenser coil, the cabinet, and condensate drains should be serviced as described below. Also at this time, the air conditioner should be operated in the cooling and heating cycles as described in Chapter 3, Start-Up. In addition to this seasonal check-out, the ModPac should be maintained as follows:

Air Filter

Replace the air filter whenever it is visibly dirty. Never operate the unit without the return air filters in place.

Evaporator

If the evaporator becomes clogged or dirty, it may be cleaned by careful vacuuming or with a commercial evaporator cleaning spray. DO NOT use a solvent containing bleach, acetone, or flammable substances. Turn power off before cleaning. Be careful not to wet any of the electrical components. Be sure the unit has dried before restarting.

Condenser

Periodically inspect the outdoor condenser coil and the cabinet air reliefs for dirt or obstructions. Remove foreign objects such as leaves, paper, etc.

If the condenser coil is dirty, it may be washed off with a commercial solvent intended for this purpose. TURN OFF POWER BEFORE CLEANING! Be sure that all electrical components are thoroughly dry before restoring power.

Cabinet

The cabinet may be cleaned with a sponge and warm, soapy water or a mild detergent. Do not use bleach, abrasive chemicals or harmful solvents.

Drains

Regularly check the primary and secondary condensate drains. The secondary drain has a stand pipe. An obstruction will force water to dump into the middle of the unit and drain out the sides of the ModPac, causing discoloration of the side panels. If discoloration is noted, service the drains.

If a commercial drain solvent is used, flush out the drain pan and system with plenty of fresh water to prevent corrosion.

Lubrication

Oiling of the condenser fan motor or the evaporator blower motor is not required.

Chapter 7. Warranty

7.1 Airxcel Commercial Group Limited Product Warranty

Airxcel Commercial Group (ACG) warrants its products to be free from defects in materials and workmanship under normal use to the original purchaser when installed within the contiguous United States, the District of Columbia, and Canada for the period of time in the table below. For units installed in Alaska and Hawaii, flat rate labor applies. If any part of your ACG product fails within 15 months from the date of the original shipment from ACG, or within twelve months from the date of original start-up but not to exceed 18 months from date of original shipment, whichever comes first, ACG will furnish without charge, EXW Cordele, Georgia, the required replacement part. The owner must provide proof of the date of the original start-up. The contractor's invoice, the certificate of occupancy, or similar documents are examples of acceptable proof of the date of the original start-up.

Marvair, ICE, Eubank	Suburban Applied Products
90 Days* w/Flat Rate Labor *(See Marvair, ICE, Eubank Flat Rate Labor Guidelines)*	1 Year Parts/Labor – w/Flat Rate Labor *(See Suburban AP Flat Rate Labor Guidelines)*
1 Year Parts	5 Years Heat Exchanger
5 Years Compressor	5 Years Compressor

*If any part of your ACG unit fails within 90 days of the commencement of the warranty, ACG will furnish without charge, EX Works, Cordele, Georgia, the required replacement part and pay for the labor to replace the part in accordance with the ACG Flat Rate Labor Guidelines.

The following optional warranties are available from Airxcel Commercial Group:

Bronze	Silver	Gold	Diamond
Any Special Warranty Written for a Job	1 Year Parts/Labor	2 Years Parts/Labor	5 Years Parts/Labor

The responsibility of the equipment owner includes:

1. To operate the equipment in accordance with the manufacturer's instructions.
2. To provide easy accessibility for servicing.
3. To check and reset any circuit breaker(s) and/or disconnect(s) prior to calling for service.
4. To keep the unit clean and free of dirt and containment and replace filters as required.
5. To keep the outdoor coil clean and free of leaves, paper, or other debris.
6. To pay the charges incurred when any of the above have not been done.
7. To pay for repair or replacement of any material or part other than those within the ACG unit or controller.

ACG will not be responsible for labor, transportation costs, delays or failures to complete repairs caused by events beyond our control.

This warranty does not cover:

1. Any transportation, related service labor, diagnosis calls, filter, driers, refrigerant, or any other material charges.
2. Damages caused by shipping, accident, abuse, negligence, misuse, fire, flood, or Acts of God.
3. Damages caused by operating or staging the unit in a corrosive environment
4. Damages caused by improper application of the product.
5. Damages caused by failing to perform proper routine maintenance.
6. Expenses incurred for erecting, disconnecting or dismantling the product or installing the replacement part(s).
7. Products not installed or operated according to the included instructions, local codes, and good trade practices.
8. Products moved from the original installation site.
9. Products lost or stolen
10. Consequential damages or incidental expenses including losses to persons, property or business.
11. Modifications to original unit after it leaves the factory, such as breaking the any part of the sealed systems unless authorized in advance in writing by ACG.

When service is required, it must be performed during normal working hours (8:00 AM - 5:00 PM) Monday - Friday and must be performed by ACG personnel or a designated Service Representative. ACG will pay for non-priority shipping costs of the compressor during the first twelve months of the warranty period. After the first twelve months of the warranty period, all costs of shipment and risk of loss during the shipment of the compressor shall be the responsibility of the owner.

The owner of the product may ship the allegedly defective or malfunctioning product or part to ACG, at such owner's expense, and ACG will diagnose the defect and, if the defect is covered under this warranty, ACG will honor its warranty and furnish the required replacement part. All costs for shipment and risk of loss during shipment of the product to ACG and back to the owner shall be the responsibility and liability of the owner. Upon written request by an owner, ACG may arrange for remote diagnosis of the allegedly defective or malfunctioning product or part but all costs for transportation, lodging and related expenses with regard to such diagnostic services shall be the responsibility and liability of the owner.

An owner requesting performance under this Warranty shall provide reasonable access to the allegedly defective or malfunctioning product or part to ACG and its authorized agents and employees.

THIS WARRANTY CONSTITUTES THE EXCLUSIVE REMEDY OF ANY PURCHASER OF AN AIRXCEL COMMERCIAL GROUP HEAT PUMP OR AIR CONDITIONER AND IS IN LIEU OF ALL OTHER WARRANTIES, EXPRESSED OR IMPLIED, INCLUDING, WITHOUT LIMITATION, ANY IMPLIED WARRANTY OF MERCHANTABILITY OR FITNESS FOR USE, TO THE FULLEST EXTENT PERMITTED BY LAW. IN NO EVENT SHALL ANY IMPLIED WARRANTY OF MERCHANTABILITY OR FITNESS FOR USE EXCEED THE TERMS OF THE APPLICABLE WARRANTY STATED ABOVE AND AIRXCEL COMMERCIAL GROUP SHALL HAVE NO OTHER OBLIGATION OR LIABILITY. IN NO EVENT SHALL MARVAIR BE LIABLE FOR INCIDENTAL OR CONSEQUENTIAL DAMAGES OR MONETARY DAMAGES.

THIS WARRANTY GIVES YOU SPECIFIC LEGAL RIGHTS, AND YOU MAY ALSO HAVE OTHER RIGHTS WHICH VARY FROM STATE-TO-STATE. Some states do not allow limitations or exclusions, so the above limitations and exclusions may not apply to you.

EXPLODED VIEWS AND PARTS LISTS

Current parts lists and exploded views of the unit can be found on our web site at www.Marvair.com. Click on the Service and Parts in the menu on the left hand side of the Home page. From the drop down menu, select Exploded Views. Once here, you can select your air conditioner or heat pump. The units are grouped by model and by the refrigerant – R-22 or R-410A.

APPENDIX A: Installation Instructions for Field Installed Electric Heat

⚠ WARNING
FIRE HAZARD

Improper adjustment, alteration, service, maintenance or installation could cause serious injury, death and/or property damage.

Installation or repairs made by unqualified persons could result in hazards to you and others. Installation MUST conform with local codes or, in the absence of local codes, with codes of all governmental authorities have jurisdiction.

The information contained in this manual is intended for use by a qualified service agency that is experienced in such work, is familiar with all precautions and safety procedures required in such work, and is equipped with the proper tools and test instruments.

Duct Work

General Information

Note: The following instructions are for general guidance only. Due to the wide variety of installation possibilities, specific instructions will not be given. When in doubt, follow standard and accepted installation practices, or contact Airxcel Commercial Group for additional assistance.

Wall Openings

Measure the dimensions of the supply and return ports on the unit.

Cut the openings in the exterior wall for the supply and return. **IMPORTANT: All units with electric heat must have 1" (25.4 mm) clearance on all four sides of the supply outlet duct flange on the unit. The 1" (25.4 mm) clearance must extend on all sides of the supply duct for the first 3 feet (1 meter) from the unit.**

IMPORTANT: Airxcel Commercial Group requires a minimum of 1" (25.4 mm) from the surface of any supply ducts to combustible material for the first 3 feet (1 meter) of the duct.

Ducting

Extensions should be cut flush with the inside wall for applications without duct work.

Applications using duct work should be designed and installed in accordance with all applicable safety codes and standards. Airxcel Commercial Group strongly recommends referring to the current edition of the National Fire Protection Association Standards 90A and 90B before designing and installing duct work. The duct system must be engineered to insure sufficient air flow through the unit to prevent over-heating of the heater element. This includes proper supply duct sizing, sufficient quantity of supply registers, adequate return and filter area. Ductwork must be of correct material and must be properly insulated.

Duct work must be constructed of galvanized steel with a minimum thickness of .019 inches for the first 3 feet (1 meter). Ductwork must be firmly attached, secured and sealed to prevent air leakage. Do not use duct liner on inside of supply duct within 4 feet (122 cm) of the unit. Galvanized metal duct extensions should be used to simplify connections to duct work and grilles. Use fabric boots to prevent the transmission of vibration through the duct system. The fabric must be U.L. rated to a minimum of 197°F (92°C).

⚠ WARNING
ELECTRICAL SHOCK HAZARD

Failure to follow safety warnings exactly could result in serious injury, death, and/or property damage.

Turn off electrical power at fuse box or service panel BEFORE making any electrical connections and ensure a proper ground connection is made before connecting line voltage.

Heater installation (see drawings and wiring diagram)

1. Remove top front panel.
2. Remove bottom front panel.
3. Remove the control box cover.
4. Remove the heater access cover plate on the upper right side of the unit by removing the three screws. Cut insulation on two sides and fold down out of way.
5. Slide new heater assembly into place by lining up stem with hole on far end. Make sure stem of new heater assembly is inserted into correct hole. The hole nearest to the indoor coil is for three element heaters and the farthest away from indoor coil is for all other heaters.
6. Install the two No. 10 screws in the heater assembly plate.
7. Install wire harness in hole provided in drain pan and then through filter bracket and then into control box.
8. Wire the heater as shown in the wiring diagram provided with the heater kit (the insulated terminal ends are to be connected at the heater)
9. Install pop tie in appropriate hole in back panel to secure wire.
10. Install closed cell strip around wires where they pass through the drain pan.
11. Reinstall the heater access cover.
12. Mount the heat contactor inside the control box where the mounting holes are provided for the heat contactor.
13. Make the wiring connections inside the control box as shown in the wiring diagram provided with the heater kit. Bundle loose wires with wire ties.
14. With a permanent marker, place an (X) in the space provided next to the heater kit rating of the installed heater on the unit data label.
15. Place the wiring diagram provided with the heater kit inside the zip lock bag which is affixed to the back side of the control box cover.
16. Replace the control box cover, the bottom front cover and the top front panel.

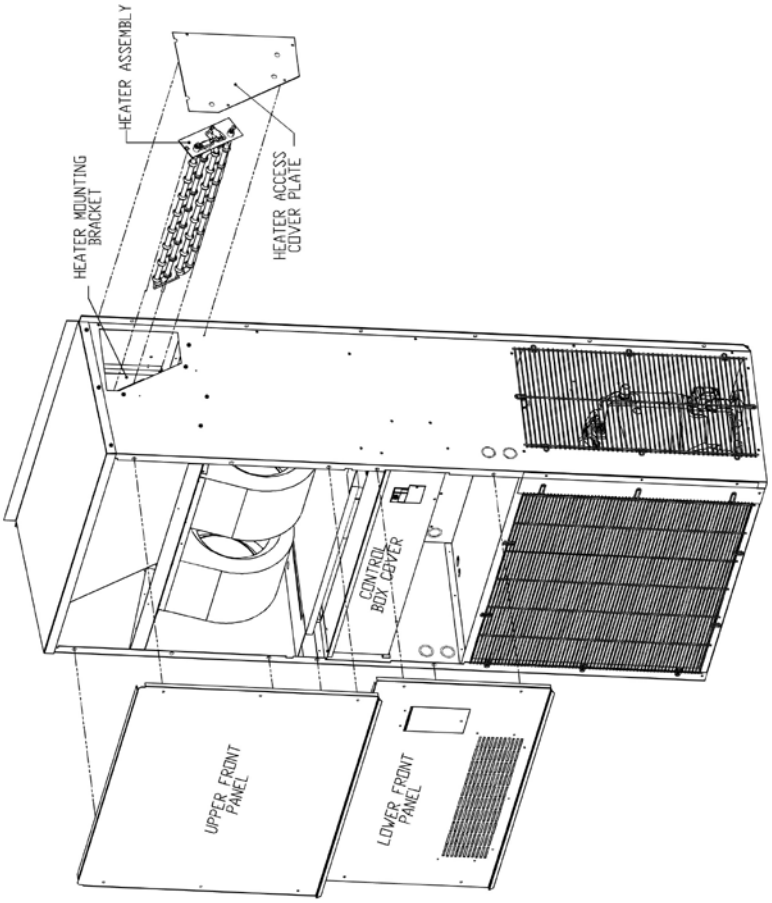
HEATER ASSEMBLY
HEATER MOUNTING BRACKET
HEATER ACCESS COVER PLATE
CONTROL BOX COVER
UPPER FRONT PANEL
LOWER FRONT PANEL

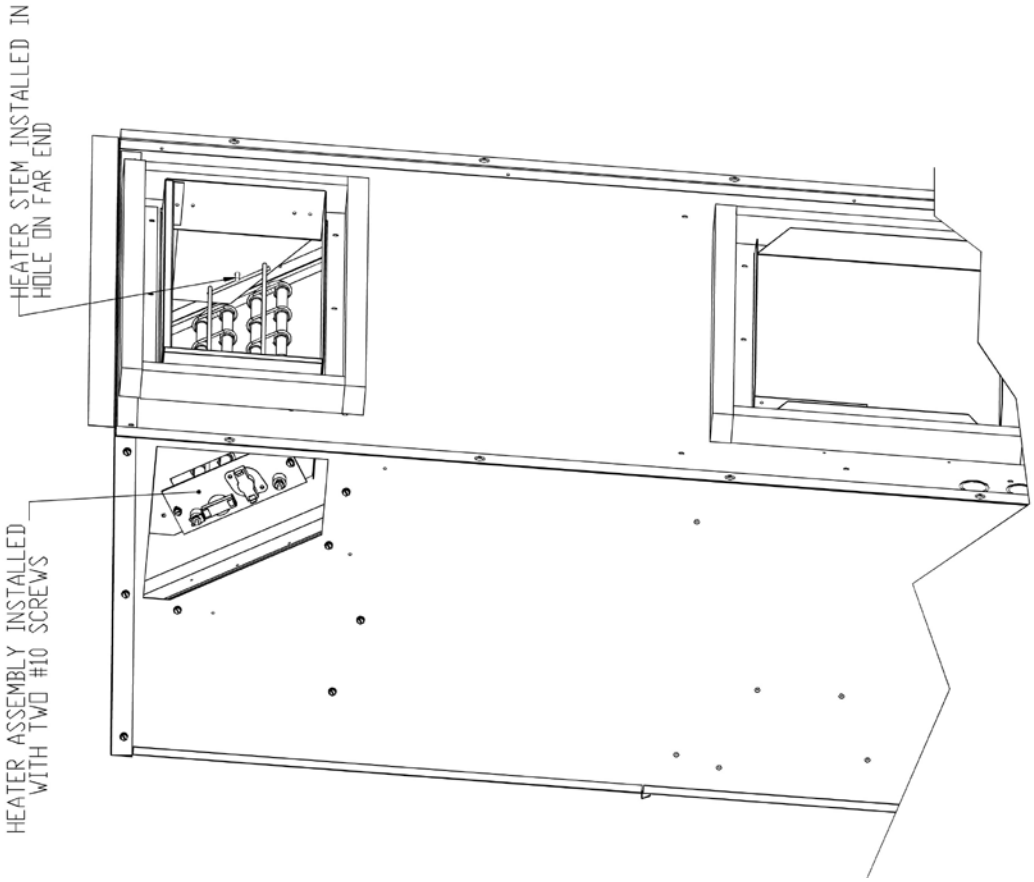
HEATER STEM INSTALLED IN HOLE ON FAR END
HEATER ASSEMBLY INSTALLED WITH TWO #10 SCREWS

Notes